LG TOTAL HVAC SOLUTION PROVIDER

ENGINEERING PRODUCT DATA BOOK

Therma V

Monobloc, R290

MFL66101130

LG
Life's Good

Region : EU

Published on May 30, 2025

Therma V
General Information

Model Line Up

1. Model line up

1.1 Indoor Unit

Product	Phase	Chassis	Model Name
Hydro Unit	1	K1	FHNW16606C0 [HN1616HC NK0]
	3		FHNW16809C0 [HN1639HC NK0]
Control Unit	-	-	PHCS0 [PHCS0]
Cascade Control Unit	-	-	PHCM0 [PHCM0]
Combi Unit	1	K5	FHNW20606Y0 [HN1616HY NK0]
	3		FHNW20809Y0 [HN1639HY NK0]

1.2 Outdoor Unit

Product	Phase	Chassis	Capacity Index (kW)	Model Name
Monobloc	1	UN36B	7.0	FHBW076B0 [HM071HF UB40]
			9.0	FHBW096B0 [HM091HF UB40]
		UN60B	12.0	FHBW126B0 [HM121HF UB60]
			14.0	FHBW146B0 [HM141HF UB60]
			16.0	FHBW166B0 [HM161HF UB60]
	3	UN36B	7.0	FHBW078B0 [HM073HF UB40]
			9.0	FHBW098B0 [HM093HF UB40]
		UN60B	9.0	FHBW098X0 [HM093HFX UB60]
			12.0	FHBW128B0 [HM123HF UB60]
			14.0	FHBW148B0 [HM143HF UB60]
			16.0	FHBW168B0 [HM163HF UB60]

Note

* : Actual system capacity would be different accordance with combination of outdoor unit.

1.3 Combination Compatibility

Combination Compatibility	Indoor Unit					
	Hydro Unit		Control Unit	Cascade Control Unit	Combi Unit	
Outdoor Unit	FHNW16606C0 [HN1616HC NK0]	FHNW16809C0 [HN1639HC NK0]	PHCS0 [PHCS0]	PHCM0 [PHCM0]	FHNW20606Y0 [HN1616HY NK0]	FHNW20809Y0 [HN1639HY NK0]
FHBW076B0 [HM071HF UB40]	O	X	O	O	O	X
FHBW096B0 [HM091HF UB40]	O	X	O	O	O	X
FHBW126B0 [HM121HF UB60]	O	X	O	O	O	X
FHBW146B0 [HM141HF UB60]	O	X	O	O	O	X
FHBW166B0 [HM161HF UB60]	O	X	O	O	O	X
FHBW078B0 [HM073HF UB40]	X	O	O	O	X	O
FHBW098B0 [HM093HF UB40]	X	O	O	O	X	O
FHBW098X0 [HM093HFX UB60]	X	O	O	O	X	O
FHBW128B0 [HM123HF UB60]	X	O	O	O	X	O
FHBW148B0 [HM143HF UB60]	X	O	O	O	X	O
FHBW168B0 [HM163HF UB60]	X	O	O	O	X	O

Note

O : Applied, X : Not Applied

Cascade Control Unit can only be combined with the same outdoor unit, and a minimum of 2 units and a maximum of 8 units can be installed.
ex) HM161HF + HM161HF (O) / HM161HF + HM141HF (X)

Product Data

Hydro Unit

Control Unit

Cascade Control Unit

Combi Unit

Monobloc

Hydro Unit

1. Specifications
2. List of Functions
3. Accessory Compatibility List
4. Dimensions
5. Piping Diagrams
6. Wiring Diagrams

1. Specifications

Category		Unit	FHNW16606C0 [HN1616HC NK0]	FHNW16809C0 [HN1639HC NK0]
Major	Minor			
Classification	Chassis	-	K1	K1
Operation range(Leaving Water)	Cooling (min. ~ max.)	℃(DB)	5~27	5~27
	Heating (min. ~ max.)	℃(DB)	15~75	15~75
	Domestic hot water (min. ~ max.)	℃(DB)	15 ~ 80*	15 ~ 80*
Power supply	Case 1	V, Φ, Hz	220-230-240, 1, 50	220-230-240, 1, 50
Current	Current (max.)	A	0.6	0.6
Recommended circuit breaker(ELCB)	-	A	10	10
Connecting cable	Power supply cable (H07RN-F)	mm² × cores	0.75 x 3C	0.75 x 3C
	Communication cable (H07RN-F)	mm² × cores	0.75 x 2C	0.75 x 2C
Electric backup heater	Type	-	Sheath	Sheath
	Power supply	V, Φ, Hz	220-230-240, 1, 50	380-400-415, 3, 50
	Number of heating coil	EA	2	3
	Capacity combination	kW	3.0 + 3.0	3.0 + 3.0 + 3.0
	Heating steps	Step	2	2
	Rated running current	A	26	13
	Power cable (H07RN-F) (included earth)	mm² × cores	4.0 x 3C	2.5 x 4C
	Recommended circuit breaker (ELCB)	A	32	16
Expansion tank	Volume (max.)	ℓ	8	8
	Water pressure (max.)	bar	3	3
	Water pressure (pre-charged)	bar	1	1
Sound power level	Heating (rated)	dB(A)	39	39
Water connecting pipes	Inlet	inch	Male PT 1" according to ISO 7-1(tapered pipe threads)	Male PT 1" according to ISO 7-1(tapered pipe threads)
	Outlet	inch	Male PT 1" according to ISO 7-1(tapered pipe threads)	Male PT 1" according to ISO 7-1(tapered pipe threads)
Dimensions	Net (W x H x D)	mm	490 x 850 x 315	490 x 850 x 315
	Shipping (W x H x D)	mm	563 x 1,082 x 375	563 x 1,082 x 375
Weight	Net	kg	30	31
	Shipping	kg	35	36
Exterior	Color of chassis	-	Noble White	Noble White
	RAL Code of chassis	-	RAL 9016	RAL 9016

Note

1. Due to our policy of innovation some specifications may be changed without notification.
2. Wiring cable size must comply with the applicable local and national code. And "Electric characteristics" chapter should be considered for electrical work and design. Especially the power cable and circuit breaker should be selected in accordance with that.
3. Sound power level is measured on the rated condition in accordance with ISO 9614 standard.
   Therefore, these values depend on the ambient conditions and values are normally higher in actual operation.
4. * DHW 65~80°C operating is available only when the booster heater is operating.

2. List of functions

Category	Functions	FHNW16606C0 [HN1616HC NK0]	FHNW16809C0 [HN1639HC NK0]
Reliability	Self diagnosis	O	O
Convenience	Auto Restart	O	O
	Child Lock	O	O
	Group Control	X	X
	Sleep Timer	O	O
	Turn On/Off Reservation	O	O
	Schedule	O	O
	Low Noise Operation	O	O
Installation	Electric Backup Heater	O	O
	Domestic Hot Water Tank heater	Accessory(3rd party)	Accessory(3rd party)
Water Product functions	Water Pump Pre-run / Over-run control	X	X
	Water Pump Forced Operation	O	O
	Water Pump Speed Control	-	-
	Water Flow Detection by Flow Sensor	O	O
	Water Flow Control	O	O
	Water Pressure Monitoring	O	O
	Thermostat Interface (230V AC)	O	O
	Thermostat Interface (24V AC)	X	X
	One Point Dry Contact Input (CN-EXT)	O	O
	Digital Output For External Pump	O	O
	Digital inputs for energy saving (Ready for Smart Grid)	O	O
	Communication with LG ESS by Modbus	O	O
	Anti-Condensation on Floor (cooling)	O	O
	Anti-Freezing Control	O	O
	Anti-overheating Of Water Pipe	O	O
	Emergency Operation	O	O
	Weather dependent operation with thermostat	O	O
	Seasonal auto mode (heating and cooling)	O	O
	DHW(Domestic Hot Water) Tank Kit	O	O
	Scheduler (DHW Tank Heater)	O	O
	Timer (DHW Tank Heater)	O	O
	Quick DHW Tank Heating	O	O
	DHW Recirculation	O	O
	Tank Disinfection	-	-
	Electric Heater Capacity Control	-	-
	Solar thermal function	Accessory(3rd party)	Accessory(3rd party)
	Screed Drying Mode	O	O
	Current Flow Rate Monitoring	-	-
	Energy Monitoring	O	O
Special Functions	Wi-Fi Control	Accessory	Accessory
	Modbus connectivity (without gateway)	O	O
	Remote room temperature sensing	Accessory	Accessory
	Outdoor Temperature sensing	Accessory	Accessory
	2nd Circuit (Mixing Circuit)	Accessory(3rd party)	Accessory(3rd party)
	2-Remo control	Accessory	Accessory

Note

1. O : Applied, X : Not applied
   Accessory : Ordered and purchased separately the accessory package referring to the model name provided and install at field.
   Accessory line-ups varies by region, so check your local catalogue or local sales material.
2. Solar thermal system requires the 3rd party accessory, PT-1000 sensor. (field supply)

3. Accessory Compatibility List

Category	Accessory Name	Model Name	Descriptions	FHNW16606C0 [HN1616HC NK0] FHNW16809C0 [HN1639HC NK0]
Remote Controller	Wired - RS3 (Standard III)	PREMTW101	White	O
Dry Contact	Simple	PDRYCB000	1 input port, AC 220 - 240V	O
	Thermostat	PDRYCB320	8 input port, For 3rd Party Thermostat (Analog Input)	O
Integration Device	Remote Temperature sensor	PQRSTA0	Room temperature sensor, NTC 10kΩ, include casing	O
	Group Control wire	PZCWRCG3	Cable Assembly for group control (Y-type cable : 0.25m,cable : 9.6m)	X
ETC	Extension wire	PZCWRC1	Extension wire for IDU-wired remote controller (9.6m)	O
	2-Remo Control wire	PZCWRC2	Y-type cable to connect additional Remote Controller as slave	O
	Wi-Fi Modem	PWFMDD200	Device to use ThinQ app include connection cable	O
	Wi-Fi Extension cable	PWYREW000	USB Extension cable : 10 m	O
	Meter Interface	PENKTH000	Interface to connect 3rd-party heat and/or watt meter to indoor unit by S0 or Modbus	O
Special Kit	Solar-Thermal kit	PHLLA*	Limit Temperature : 96 ℃	O
	IDU Drain Pan	PHDPB	For Hydro Unit	X
		PHDPC	For Hydro Unit	O
	DHW tanks (Single coil)	OSHW-200F	200 L	O
		OSHW-300F	300 L	O
		OSHW-500F	500 L	O
	DHW tanks (Double coil)	OSHW-300FD	300 L	O
	DHW Heater kit	PHLTA	For Hydro Unit and Control Unit(except for HN1639 NK3)	O
		PHLTC	For Hydro Unit (HN1639 NK3)	X
	Wall mounted out-door air temp. sensor	PHATS0	For measuring outside temperature	O
	Thermistor for Water Tank (Buffer Tank, DHW Tank)	PHRSTA0	Included in DHW Tank kit	O
	Thermostatic Mixing valve	OSHA-MV	3/4″ DN20	O
		OSHA-MV1	1″ DN25	O
	3way valve	OSHA-3V	Diverting valve between space heating and DHW heating	O
	Thermistor for 2nd Circuit	PRSTAT5K10	NTC 5kΩ sensor needed to control mixing circuit or if 3rd party backup heater is used	O
	Backup Heater	HA031M E1	1Ø, 3kW (For Monobloc)	X
		HA061M E1	1Ø, 6kW (For Monobloc)	X
		HA063M E1	3Ø, 6kW (For Monobloc)	X
		HA031M E2	1Ø, 3kW (For Monobloc)	X
		HA061M E2	1Ø, 6kW (For Monobloc)	X
		HA063M E2	3Ø, 6kW (For Monobloc)	X
		HA061B E1	1Ø, 6kW (For Hydrosplit, HN1600MB NK0)	X
		HA061C E1	1Ø, 6kW (For Hydrosplit, HN1600MC NK1)	X
		HA063B E1	3Ø, 6kW (For Hydrosplit, HN1600MB NK0)	X
		HA063C E1	3Ø, 6kW (For Hydrosplit, HN1600MC NK1)	X
	Cover plate	PDC-HK10	For Combi Unit and Hydro Unit Type indoor units	O

Note

1. O: Possible, X: Impossible, - : Not applicable, Embedded : Included with product.
2. Some advanced functions controlled by individual controller cannot be operated.
3. If there is a difference in development time between the product and the remote controller, some functions cannot be operated.
4. Meter interface cannot be connected at the same time with 3rd-party controller.
5. * : It includes double-sensor for solar tank. The collector sensor (PT1000) needs to be supplied locally.
6. If you need more detail, please refer to the control(***BECON***) PDB or the manual of product. (http://partner.lge.com > Select Your Region : Home> Doc.Library> Product > Control(BECON)).

4. Dimensions

■ External : FHNW16606C0 [HN1616HC NK0], FHNW16809C0 [HN1639HC NK0]

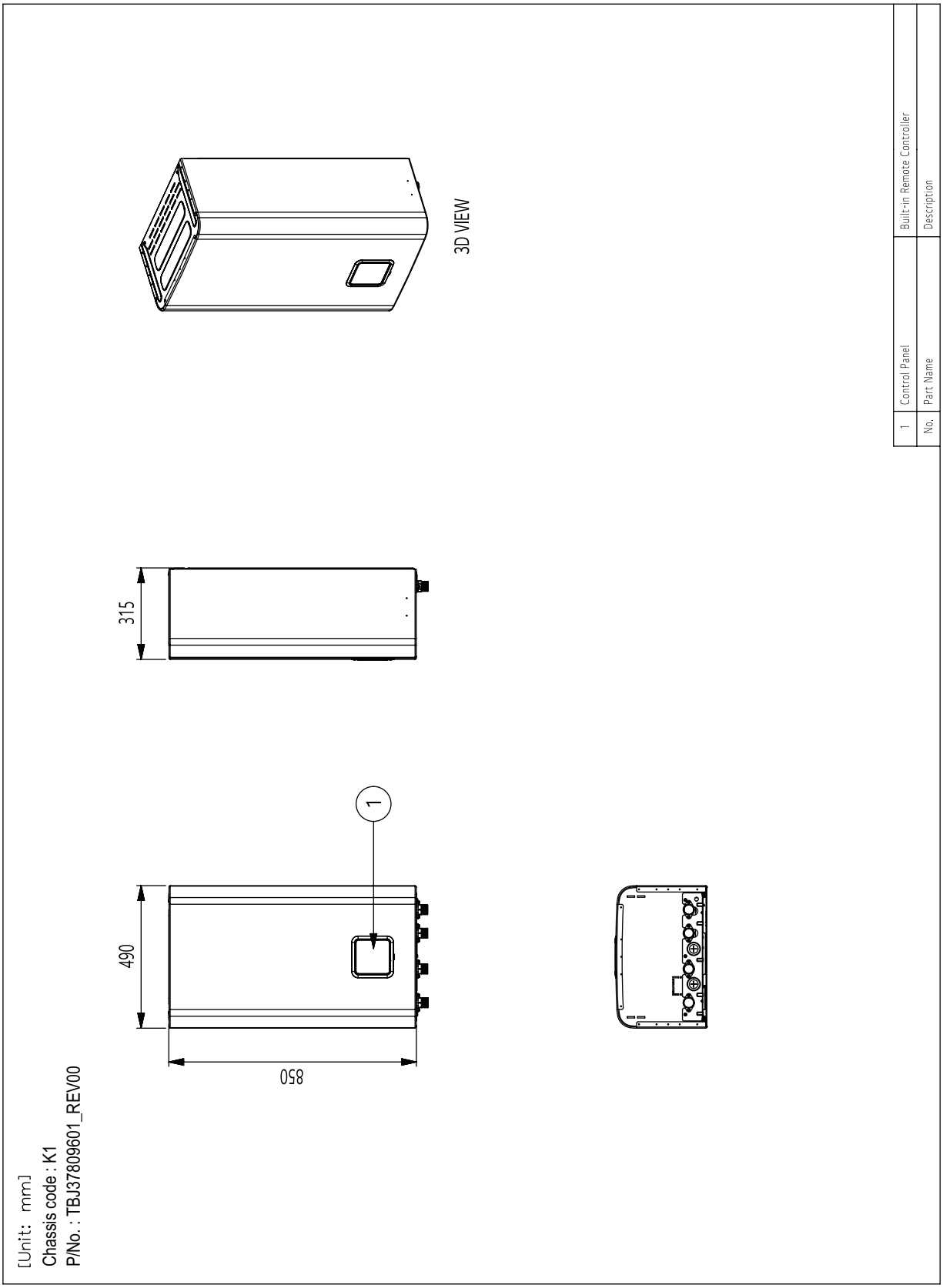

4. Dimensions

■ Internal : FHNW16606C0 [HN1616HC NK0], FHNW16809C0 [HN1639HC NK0]

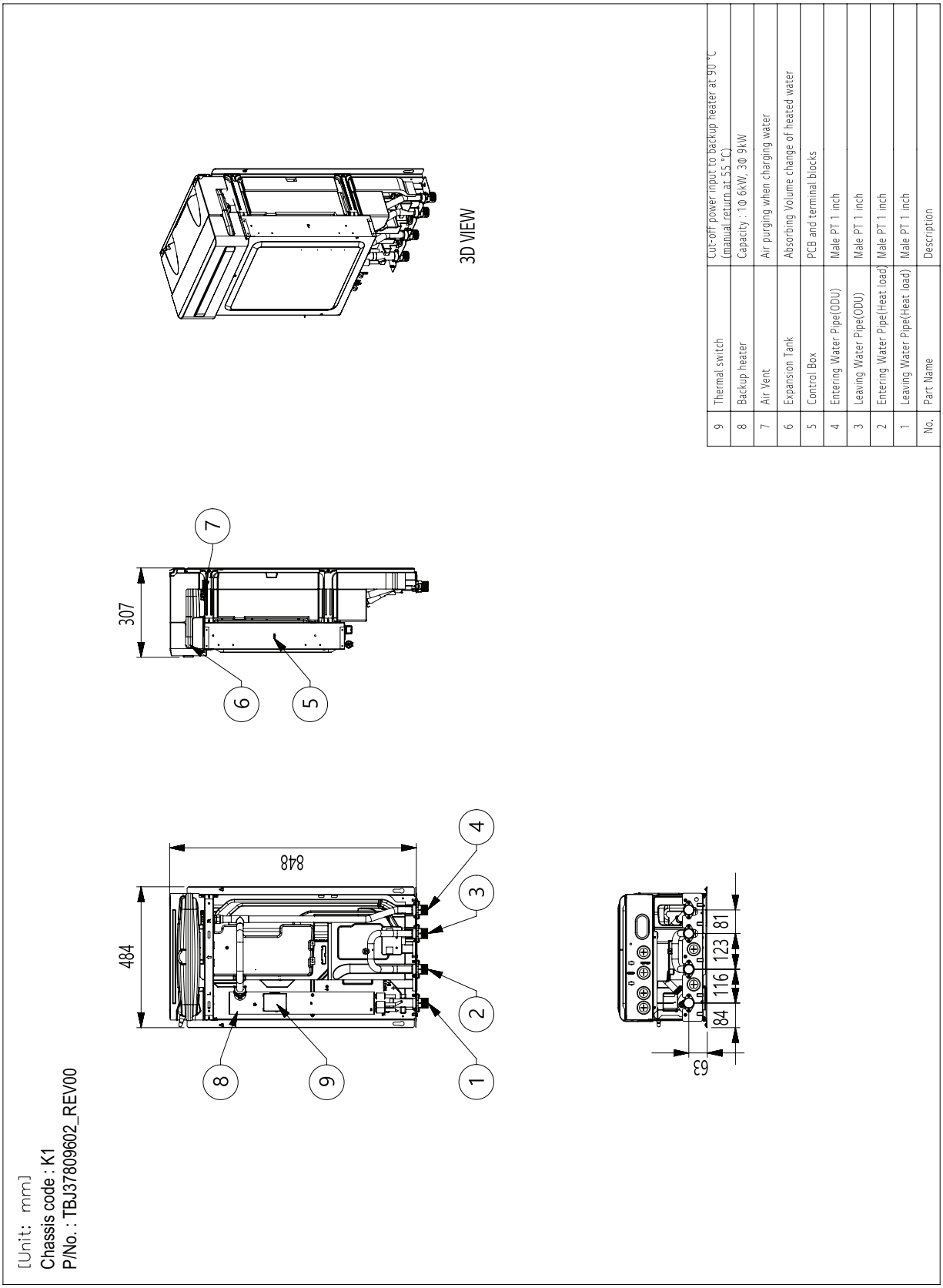

No.	Part Name	Description
9	Thermal switch	Cut-off power input to backup heater at 90 °C (manual return at 55 °C)
8	Backup heater	Capacity : 1Ø 6kW, 3Ø 9kW
7	Air Vent	Air purging when charging water
6	Expansion Tank	Absorbing Volume change of heated water
5	Control Box	PCB and terminal blocks
4	Entering Water Pipe(ODU)	Male PT 1 inch
3	Leaving Water Pipe(ODU)	Male PT 1 inch
2	Entering Water Pipe(Heat load)	Male PT 1 inch
1	Leaving Water Pipe(Heat load)	Male PT 1 inch

5. Piping Diagram

■ FHNW16606C0 [HN1616HC NK0], FHNW16809C0 [HN1639HC NK0]

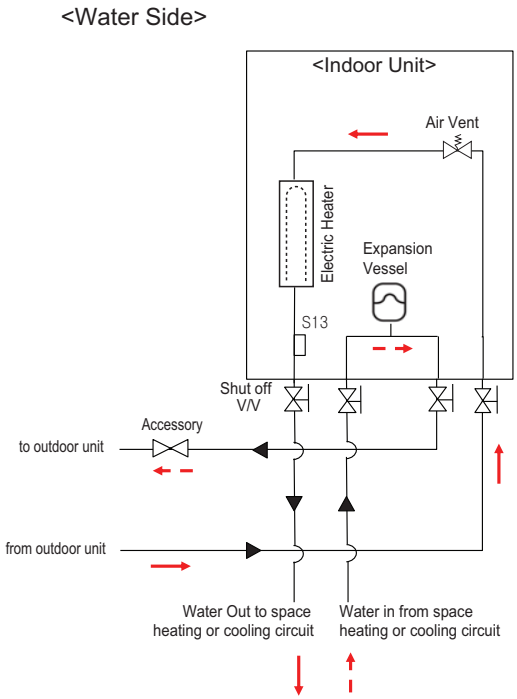

* S13 : Electric backup heater outlet temp. sensor

6. Wiring Diagram

■ FHNW16606C0 [HN1616HC NK0]

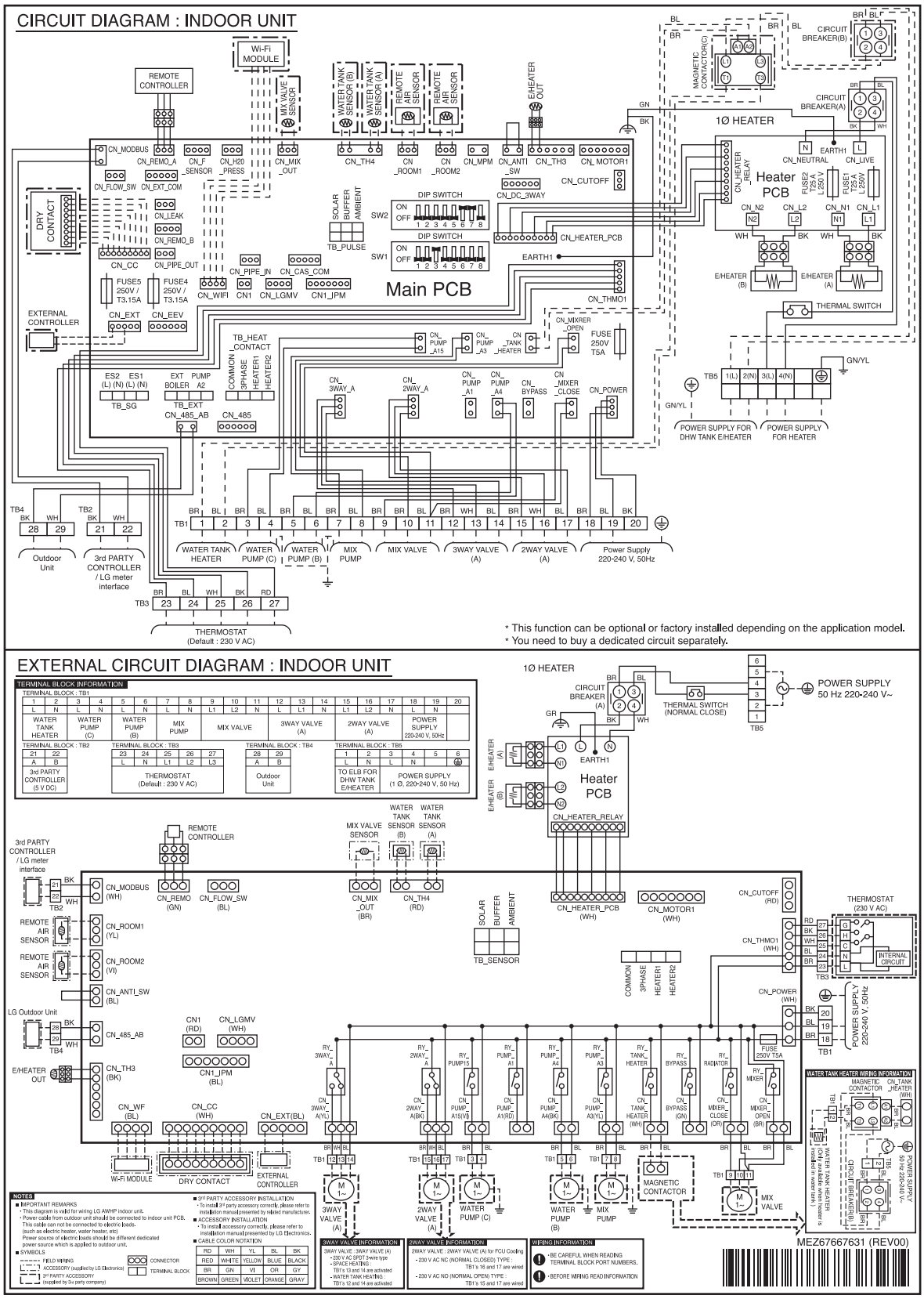

6. Wiring Diagram

■ FHNW16809C0 [HN1639HC NK0]

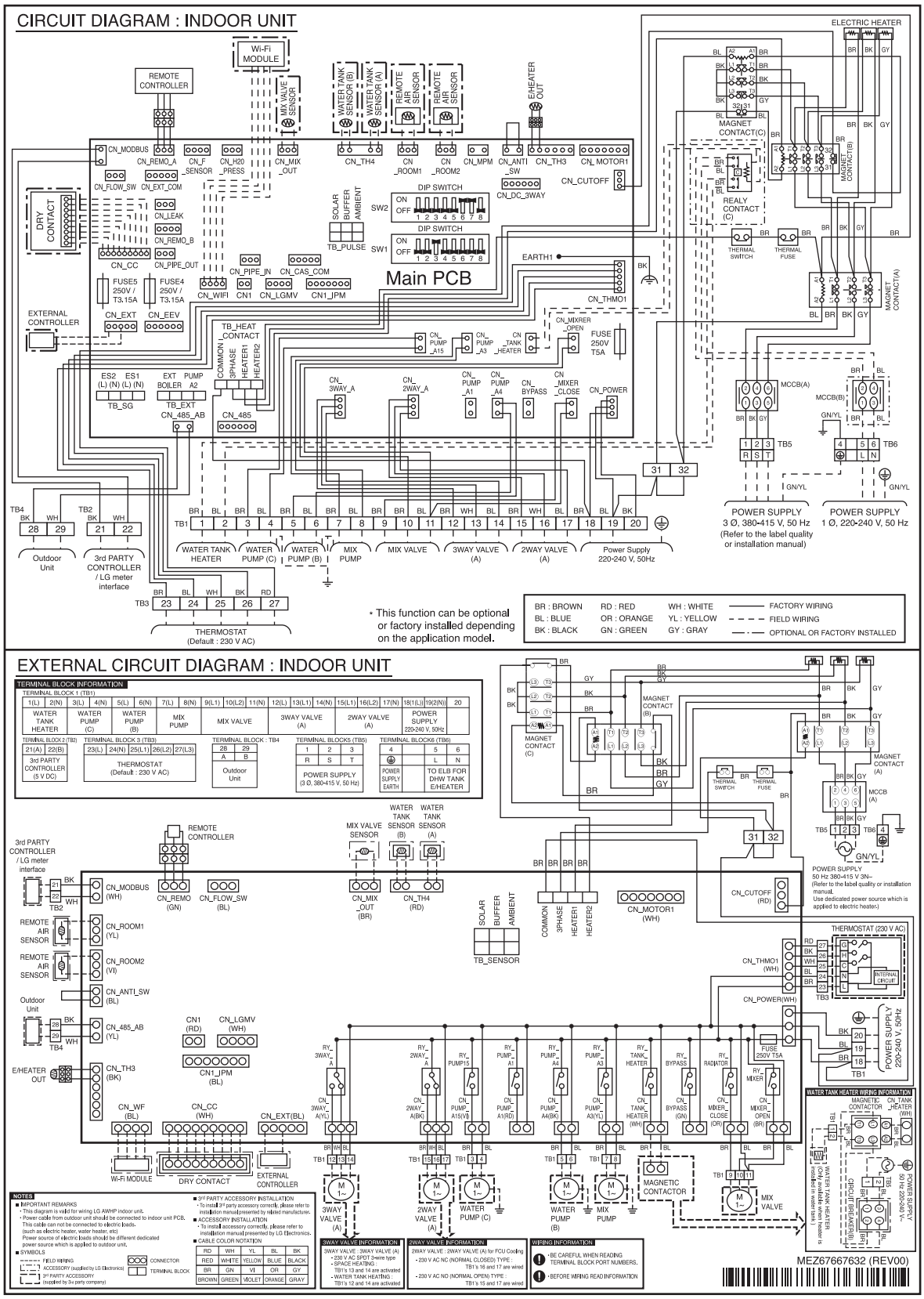

Control Unit

1. Specifications
2. List of Functions
3. Accessory Compatibility List
4. Dimensions
5. Wiring Diagrams

1. Specifications

Category		Unit	PHCS0 [PHCS0]
Major	Minor		
Classification	Chassis	-	Accessory
Operation range(Leaving Water)	Cooling (min. ~ max.)	℃(DB)	5~27
	Heating (min. ~ max.)	℃(DB)	15~75
	Domestic hot water (min. ~ max.)	℃(DB)	15 ~ 80*
Power supply	Case 1	V, Φ, Hz	220-230-240, 1, 50
Current	Current (max.)	A	0.6
Recommended circuit breaker(ELCB)	-	A	10
Connecting cable	Power supply cable (H07RN-F)	mm² × cores	0.75 x 3C
	Communication cable (H07RN-F)	mm² × cores	0.75 x 2C
Dimensions	Net (W x H x D)	mm	420 x 490 x 141
	Shipping (W x H x D)	mm	466 x 580 x 184
Weight	Net	kg	6.8
	Shipping	kg	9.2
Exterior	Color of chassis	-	Essence White
	RAL Code of chassis	-	RAL 9003

Note

1. Due to our policy of innovation some specifications may be changed without notification.
2. Wiring cable size must comply with the applicable local and national codes. And “Electric characteristics“ chapter should be considered for electrical work and design. Especially the power cable and circuit breaker should be selected in accordance with that.
3. * DHW 65~80℃ Operating is available only when the booster heater is operating.

2. List of functions

Category	Functions	PHCS0 [PHCS0]
Reliability	Self diagnosis	O
Convenience	Auto Restart	O
	Child Lock	O
	Group Control	X
	Sleep Timer	O
	Turn On/Off Reservation	O
	Schedule	O
	Low Noise Operation	O
Installation	Electric Backup Heater	Accessory(LG and 3rd party)
	Domestic Hot Water Tank heater	Accessory(3rd party)
Water Product functions	Water Pump Pre-run / Over-run control	X
	Water Pump Forced Operation	O
	Water Pump Speed Control	-
	Water Flow Detection by Flow Sensor	O
	Water Flow Control	O
	Water Pressure Monitoring	O
	Thermostat Interface (230V AC)	O
	Thermostat Interface (24V AC)	X
	One Point Dry Contact Input (CN-EXT)	O
	Digital Output For External Pump	O
	Digital inputs for energy saving (Ready for Smart Grid)	O
	Communication with LG ESS by Modbus	O
	Anti-Condensation on Floor (cooling)	O
	Anti-Freezing Control	O
	Anti-overheating Of Water Pipe	O
	Emergency Operation	O
	Weather dependent operation with thermostat	O
	Seasonal auto mode (heating and cooling)	O
	DHW(Domestic Hot Water) Tank Kit	O
	Scheduler (DHW Tank Heater)	O
	Timer (DHW Tank Heater)	O
	Quick DHW Tank Heating	O
	DHW Recirculation	O
	Tank Disinfection	-
	Electric Heater Capacity Control	-
	Solar thermal function	Accessory(3rd party)
	Screed Drying Mode	O
	Current Flow Rate Monitoring	-
	Energy Monitoring	O
Special Functions	Wi-Fi Control	Accessory
	Modbus connectivity (without gateway)	O
	Remote room temperature sensing	Accessory
	Outdoor Temperature sensing	Accessory
	2nd Circuit (Mixing Circuit)	Accessory(3rd party)
	2-Remo control	Accessory

Note

1. O : Applied, X : Not applied
   Accessory : Ordered and purchased separately the accessory package referring to the model name provided and install at field.
   Accessory line-ups varies by region, so check your local catalogue or local sales material.
2. Solar thermal system requires the 3rd party accessory, PT-1000 sensor. (field supply)

3. Accessory Compatibility List

Category	Accessory Name	Model Name	Descriptions	PHCS0 [PHCS0]
Remote Controller	Wired - RS3 (Standard III)	PREMTW101	White	O
Dry Contact	Simple	PDRYCB000	1 input port, AC 220 - 240V	O
	Thermostat	PDRYCB320	8 input port, For 3rd Party Thermostat (Analog Input)	O
Integration Device	Remote Temperature sensor	PQRSTA0	Room temperature sensor, NTC 10kΩ, include casing	O
	Group Control wire	PZCWRCG3	Cable Assembly for group control (Y-type cable : 0.25m,cable : 9.6m)	X
ETC	Extension wire	PZCWRC1	Extension wire for IDU-wired remote controller (9.6m)	O
	2-Remo Control wire	PZCWRC2	Y-type cable to connect additional Remote Controller asslave	O
	Wi-Fi Modem	PWFMDD200	Device to use ThinQ app include connection cable	O
	Wi-Fi Extension cable	PWYREW000	USB Extension cable : 10 m	O
	Meter Interface	PENKTH000	Interface to connect 3rd-party heat and/or watt meter to indoor unit by S0 or Modbus	O
Special Kit	Solar-Thermal kit	PHLLA*	Limit Temperature : 96 ℃	O
	IDU Drain Pan	PHDPB	For Hydro Unit	X
		PHDPC	For Hydro Unit	X
	DHW tanks (Single coil)	OSHW-200F	200 L	O
		OSHW-300F	300 L	O
		OSHW-500F	500 L	O
	DHW tanks (Double coil)	OSHW-300FD	300 L	O
	DHW Heater kit	PHLTA	For Hydro Unit and Control Unit(except for HN1639 NK3)	O
		PHLTC	For Hydro Unit (HN1639 NK3)	O
	Wall mounted outdoor air temp. sensor	PHATS0	For measuring outside temperature	O
	Thermistor for Water Tank (Buffer Tank, DHW Tank)	PHRSTA0	Included in DHW Tank kit	O
	Thermostatic Mixing valve	OSHA-MV	3/4" DN20	O
		OSHA-MV1	1" DN25	O
	3way valve	OSHA-3V	Diverting valve between space heating and DHW heating	O
	Thermistor for 2nd Circuit or E/Heater	PRSTAT5K10	NTC 5kΩ sensor needed to control mixing circuit or if 3rd party backup heater is used	O
	Backup Heater	HA031M E1	1Ø, 3kW (For Monobloc and Control Unit)	O
		HA061M E1	1Ø, 6kW (For Monobloc and Control Unit)	O
		HA063M E1	3Ø, 6kW (For Monobloc and Control Unit)	O
		HA031M E2	1Ø, 3kW (For Monobloc and Control Unit)	O
		HA061M E2	1Ø, 6kW (For Monobloc and Control Unit)	O
		HA063M E2	3Ø, 6kW (For Monobloc and Control Unit)	O
		HA061B E1	1Ø, 6kW (For Hydrosplit, HN1600MB NK0)	X
		HA061C E1	1Ø, 6kW (For Hydrosplit, HN1600MC NK1)	X
		HA063B E1	3Ø, 6kW (For Hydrosplit, HN1600MB NK0)	X
		HA063C E1	3Ø, 6kW (For Hydrosplit, HN1600MC NK1)	X
	Cover plate	PDC-HK10	For Combi Unit and Hydro Unit Type indoor units	O

Note

1. O: Possible, X: Impossible, - : Not applicable, Embedded : Included with product.
2. Some advanced functions controlled by individual controller cannot be operated.
3. If there is a difference in development time between the product and the remote controller, some functions cannot be operated.
4. Meter interface cannot be connected at the same time with 3rd-party controller.
5. * : It includes double-sensor for solar tank. The collector sensor (PT1000) needs to be supplied locally.
6. If you need more detail, please refer to the control(***BECON***) PDB or the manual of product. (http://partner.lge.com > Select Your Region : Home> Doc.Library> Product > Control(BECON)).

4. Dimensions

■ PHCS0 [PHCS0]

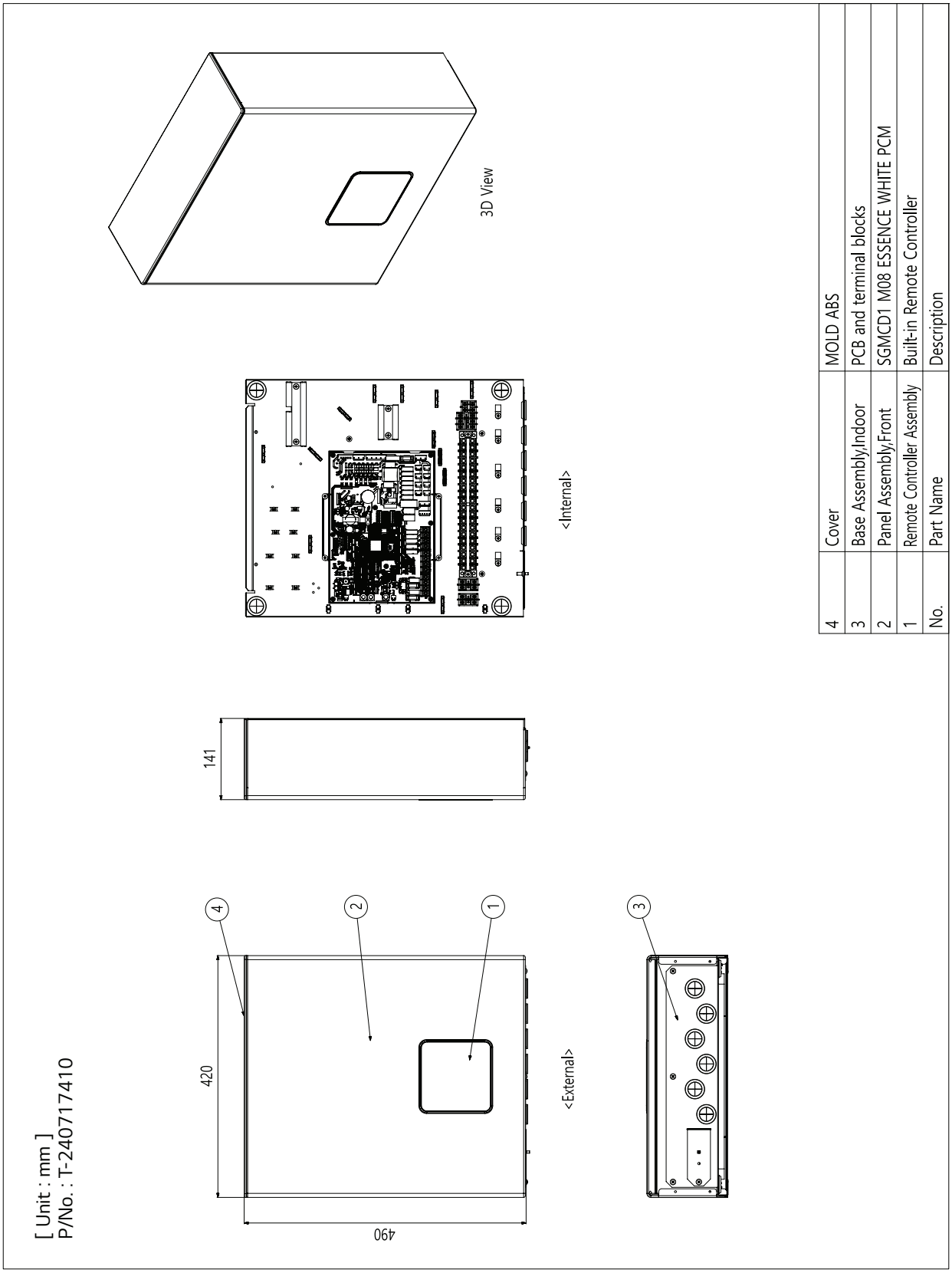

No.	Part Name	Description
4	Cover	MOLD ABS
3	Base Assembly,Indoor	PCB and terminal blocks
2	Panel Assembly,Front	SGMCD1 M08 ESSENCE WHITE PCM
1	Remote Controller Assembly	Built-in Remote Controller

5. Wiring Diagram

■ PHCS0 [PHCS0]

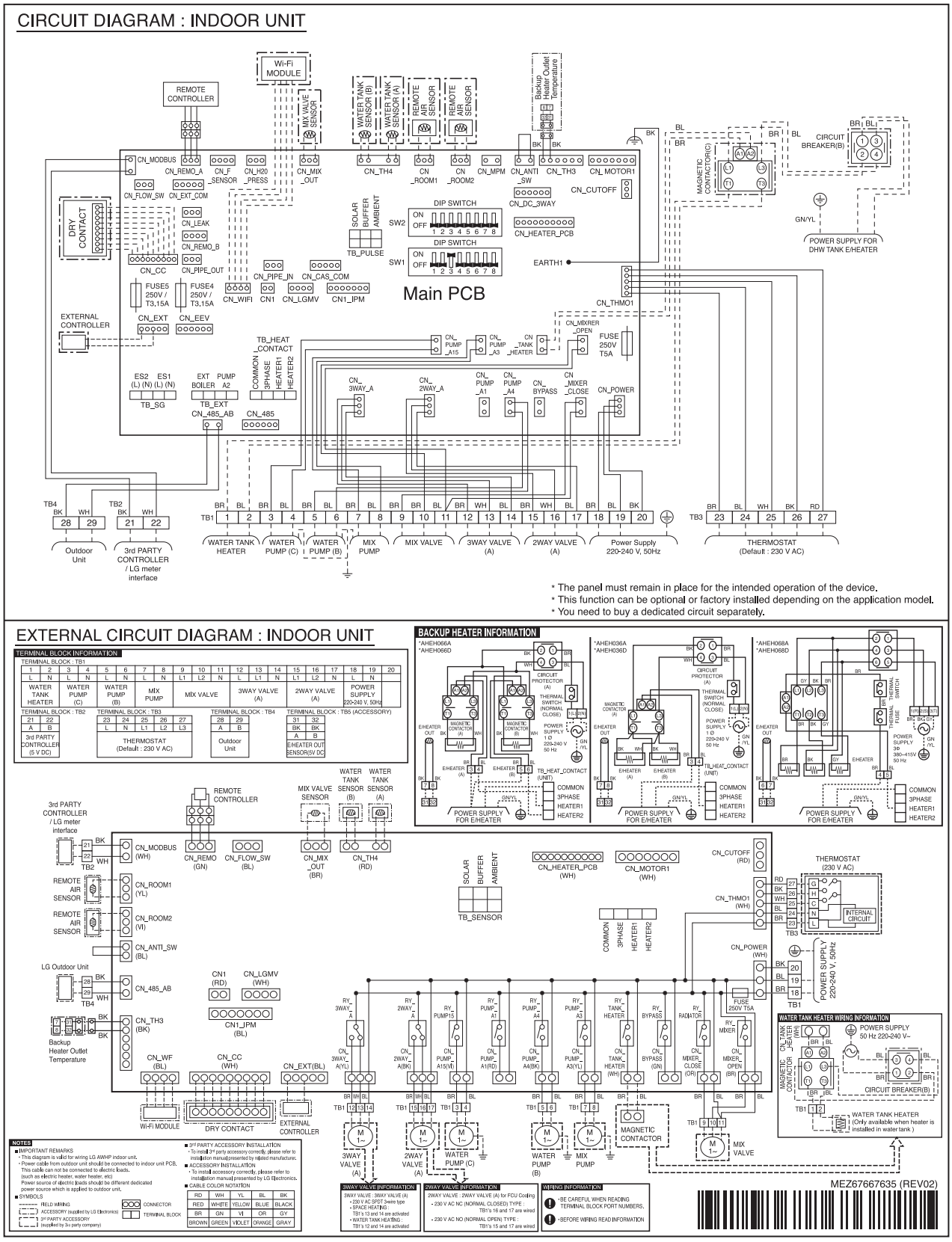

Cascade Control Unit

1. Specifications
2. List of Functions
3. Accessory Compatibility List
4. Dimensions
5. Wiring Diagrams

1. Specifications

Category		Unit	PHCM0 [PHCM0]
Major	Minor		
Classification	Chassis	-	Accessory
Operation range(Leaving Water)	Cooling (min. ~ max.)	℃(DB)	5~27
	Heating (min. ~ max.)	℃(DB)	15~70
	Domestic hot water (min. ~ max.)	℃(DB)	15 ~ 80*
Power supply	Case 1	V, Φ, Hz	220-230-240, 1, 50
Current	Current (max.)	A	0.6
Recommended circuit breaker(ELCB)	-	A	10
Connecting cable	Power supply cable (H07RN-F)	mm² × cores	0.75 x 3C
	Communication cable (H07RN-F)	mm² × cores	0.75 x 2C
Dimensions	Net (W x H x D)	mm	420 x 490 x 141
	Shipping (W x H x D)	mm	466 x 580 x 184
Weight	Net	kg	7.2
	Shipping	kg	9.7
Exterior	Color of chassis	-	Essence White
	RAL Code of chassis	-	RAL 9003

Note

1. Due to our policy of innovation some specifications may be changed without notification.
2. Wiring cable size must comply with the applicable local and national codes. And “Electric characteristics“ chapter should be considered for electrical work and design. Especially the power cable and circuit breaker should be selected in accordance with that.
3. * DHW 65~80℃ Operating is available only when the booster heater is operating.

2. List of functions

Category	Functions	PHCM0 [PHCM0]
Reliability	Self diagnosis	O
Convenience	Auto Restart	O
	Child Lock	O
	Group Control	X
	Sleep Timer	O
	Turn On/Off Reservation	O
	Schedule	O
	Low Noise Operation	O
Installation	Electric Backup Heater	Accessory(3rd party)
	Domestic Hot Water Tank heater	Accessory(3rd party)
Water Product functions	Water Pump Pre-run / Over-run control	O
	Water Pump Forced Operation	O
	Water Pump Speed Control	-
	Water Flow Detection by Flow Sensor	O
	Water Flow Control	-
	Water Pressure Monitoring	O
	Thermostat Interface (230V AC)	O
	Thermostat Interface (24V AC)	-
	One Point Dry Contact Input (CN-EXT)	O
	Digital Output For External Pump	O
	Digital inputs for energy saving (Ready for Smart Grid)	O
	Communication with LG ESS by Modbus	O
	Anti-Condensation on Floor (cooling)	O
	Anti-Freezing Control	O
	Anti-overheating Of Water Pipe	O
	Emergency Operation	O
	Weather dependent operation with thermostat	O
	Seasonal auto mode (heating and cooling)	O
	DHW(Domestic Hot Water) Tank Kit	O
	Scheduler (DHW Tank Heater)	O
	Timer (DHW Tank Heater)	O
	Quick DHW Tank Heating	O
	DHW Recirculation	O
	Tank Disinfection	O
	Electric Heater Capacity Control	-
	Solar thermal function	Accessory(3rd party)
	Screed Drying Mode	O
	Current Flow Rate Monitoring	O
	Energy Monitoring	O
Special Functions	Wi-Fi Control	Accessory
	Modbus connectivity (without gateway)	O
	Remote room temperature sensing	X
	Outdoor Temperature sensing	Accessory
	2nd Circuit (Mixing Circuit)	Accessory(3rd party)
	2-Remo control	X

Note

1. O: Possible, X: Impossible, - : Not applicable
   Accessory : Ordered and purchased separately the accessory package referring to the model name provided and install at field.
   Accessory line-ups varies by region, so check your local catalogue or local sales material.
2. Solar thermal system requires the 3rd party accessory, PT-1000 sensor. (field supply)

3. Accessory Compatibility List

Category	Accessory Name	Model Name	Descriptions	PHCM0 [PHCM0]
Remote Controller	Wired - RS3 (Standard III)	PREMTW101	White	X
Dry Contact	Simple	PDRYCB000	1 input port, AC 220 - 240V	O
	Thermostat	PDRYCB320	8 input port, For 3rd Party Thermostat (Analog Input)	O
Integration Device	Remote Temperature sensor	PQRSTA0	Room temperature sensor, NTC 10kΩ, include casing	X
	Group Control wire	PZCWRCG3	Cable Assembly for group control (Y-type cable : 0.25m,cable : 9.6m)	X
ETC	Extension wire	PZCWRC1	Extension wire for IDU-wired remote controller (9.6m)	O
	2-Remo Control wire	PZCWRC2	Y-type cable to connect additional Remote Controller asslave	X
	Wi-Fi Modem	PWFMDD200	Device to use ThinQ app include connection cable	O
	Wi-Fi Extension cable	PWYREW000	USB Extension cable : 10 m	O
	Meter Interface	PENKTH000	Interface to connect 3rd-party heat and/or watt meter to indoor unit by S0 or Modbus	O
Special Kit	Solar-Thermal kit	PHLLA*	Limit Temperature : 96 ℃	O
	IDU Drain Pan	PHDPB	For Hydro Unit	X
		PHDPC	For Hydro Unit	X
	DHW tanks (Single coil)	OSHW-200F	200 L	O
		OSHW-300F	300 L	O
		OSHW-500F	500 L	O
	DHW tanks (Double coil)	OSHW-300FD	300 L	O
	DHW Heater kit	PHLTA	For Hydro Unit and Control Unit(except for HN1639 NK3)	X
		PHLTC	For Hydro Unit (HN1639 NK3)	X
	Wall mounted outdoor air temp. sensor	PHATS0	For measuring outside temperature	O
	Thermistor for Water Tank (Buffer Tank, DHW Tank)	PHRSTA0	Included in DHW Tank kit	O
	Thermostatic Mixing valve	OSHA-MV	3/4" DN20	O
		OSHA-MV1	1" DN25	O
	3way valve	OSHA-3V	Diverting valve between space heating and DHW heating	X
	Thermistor for 2nd Circuit or E/Heater	PRSTAT5K10	NTC 5kΩ sensor needed to control mixing circuit or if 3rd party backup heater is used	O
	Backup Heater	HA031M E1	1Ø, 3kW (For Monobloc and Control Unit)	X
		HA061M E1	1Ø, 6kW (For Monobloc and Control Unit)	X
		HA063M E1	3Ø, 6kW (For Monobloc and Control Unit)	X
		HA031M E2	1Ø, 3kW (For Monobloc and Control Unit)	X
		HA061M E2	1Ø, 6kW (For Monobloc and Control Unit)	X
		HA063M E2	3Ø, 6kW (For Monobloc and Control Unit)	X
		HA061B E1	1Ø, 6kW (For Hydrosplit, HN1600MB NK0)	X
		HA061C E1	1Ø, 6kW (For Hydrosplit, HN1600MC NK1)	X
		HA063B E1	3Ø, 6kW (For Hydrosplit, HN1600MB NK0)	X
		HA063C E1	3Ø, 6kW (For Hydrosplit, HN1600MC NK1)	X
	Cover plate	PDC-HK10	For Combi Unit and Hydro Unit Type indoor units	X

Note

1. O: Possible, X: Impossible, - : Not applicable, Embedded : Included with product.
2. Some advanced functions controlled by individual controller cannot be operated.
3. If there is a difference in development time between the product and the remote controller, some functions cannot be operated.
4. Meter interface cannot be connected at the same time with 3rd-party controller.
5. * : It includes double-sensor for solar tank. The collector sensor (PT1000) needs to be supplied locally.
6. If you need more detail, please refer to the control(***BECON***) PDB or the manual of product. (http://partner.lge.com > Select Your Region : Home> Doc.Library> Product > Control(BECON)).

4. Dimensions

■ PHCM0 [PHCM0]

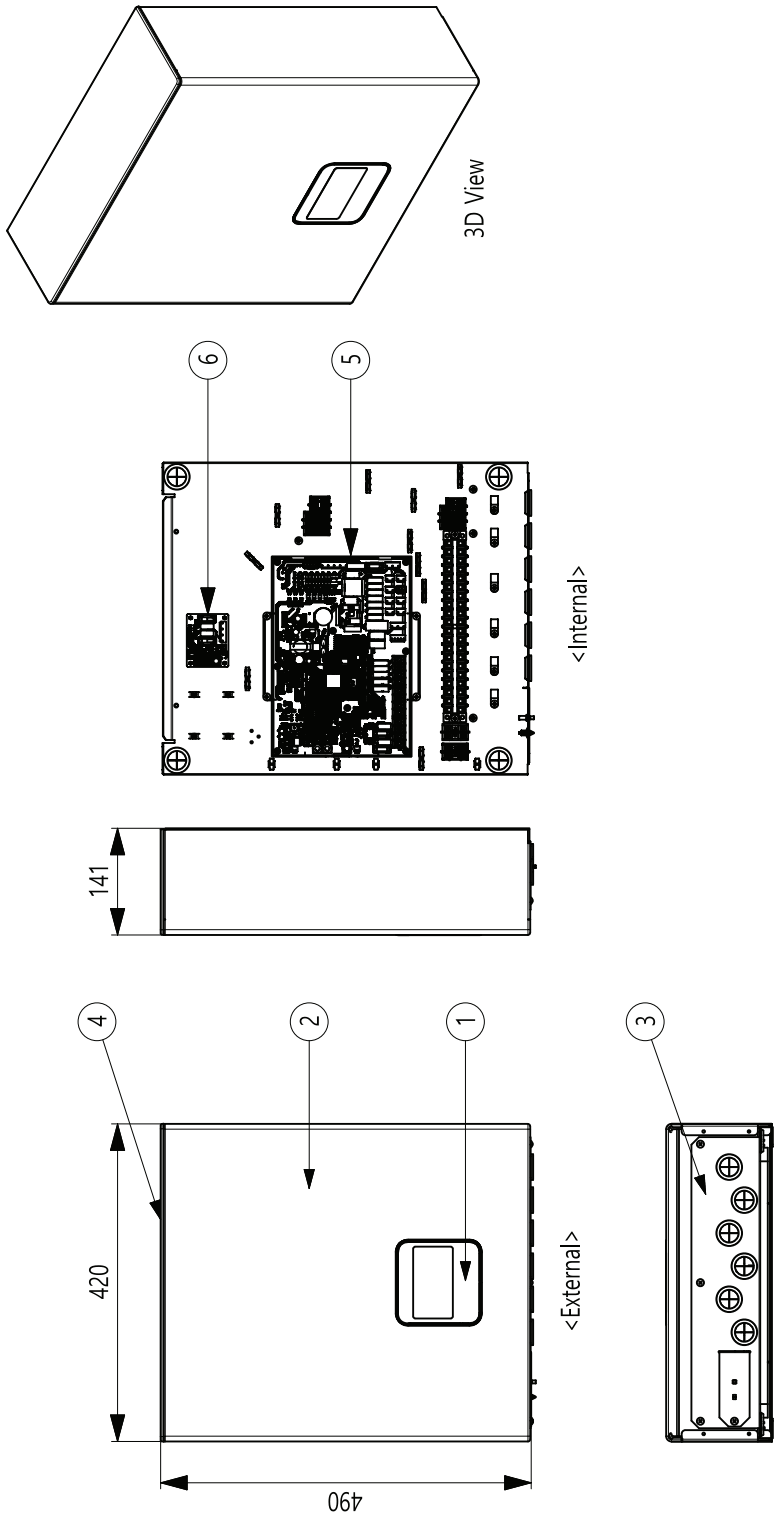

No.	Part Name	Description
6	PCB Assembly,Sub	AWHP Cascade_Sub PCBA
5	PCB Assembly,Main	AWHP Cascade_Main PCBA
4	Cover	MOLD ABS
3	Base Assembly,Indoor	PCB and terminal blocks
2	Panel Assembly,Front	SGMCD1 M08 ESSENCE WHITE PCM
1	Remote Controller Assembly	Built-in Remote Controller

[Unit: mm]
P/No : TBJ30037601

5. Wiring Diagram

■ PHCM0 [PHCM0]

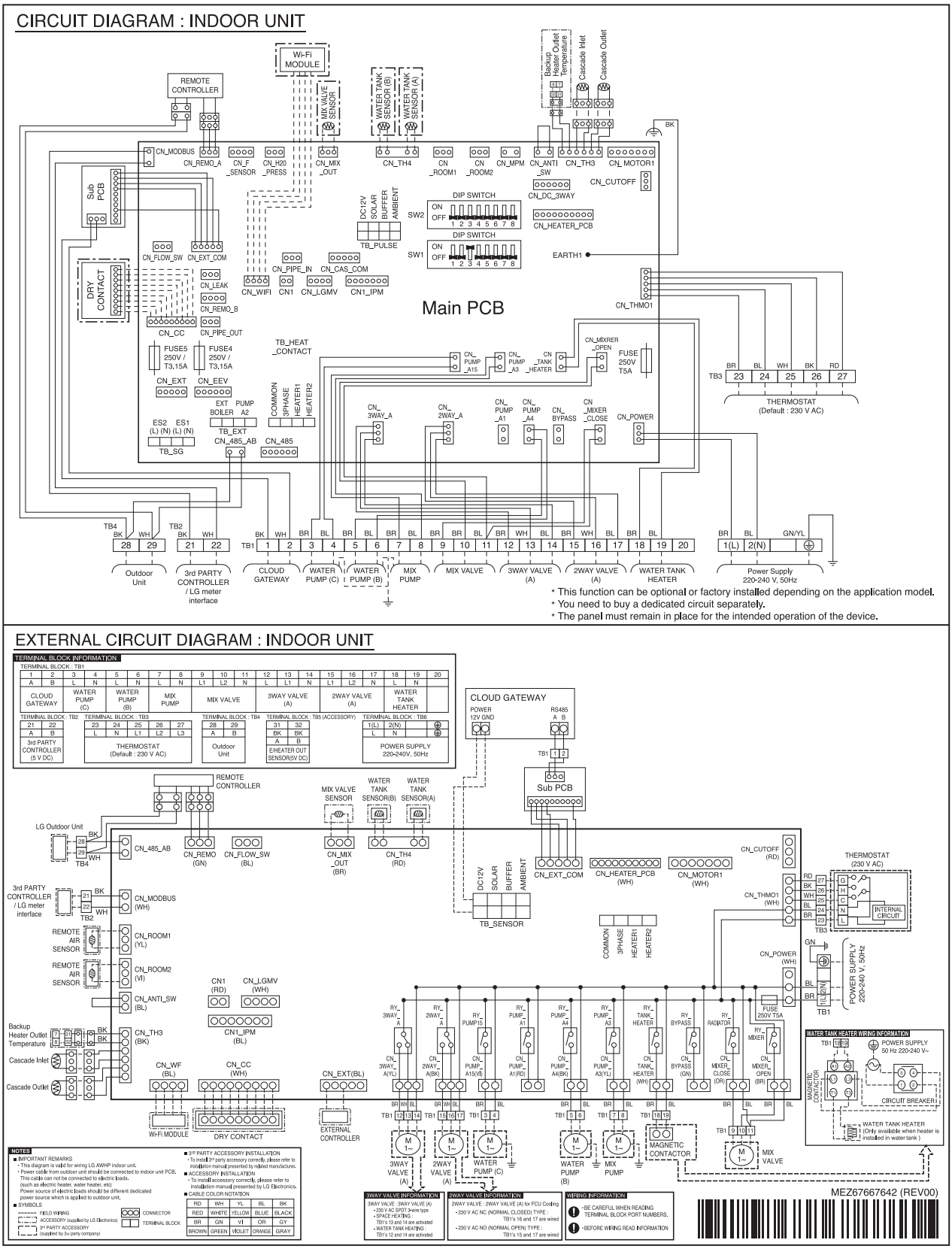

Combi Unit

1. Specifications
2. List of Functions
3. Accessory Compatibility List
4. Dimensions
5. Piping Diagrams
6. Wiring Diagrams

1. Specifications

Category		Unit	FHNW20606Y0 [HN1616HY NK0]	FHNW20809Y0 [HN1639HY NK0]
Major	**Minor**			
Classification	Chassis	-	K5	K5
Current	Current(max.)	A	0.6	0.6
Cooling Operation Range(Leaving Water)	For Fan Coil Unit(Min ~ Max)	℃	5 ~ 27	5 ~ 27
	For under floor(Min ~ Max)	℃	16 ~ 27	16 ~ 27
Heating Operation Range(Leaving Water)	Space Heating(Min ~ Max)	℃	15 ~ 75	15 ~ 75
	Domestic Hot Water(Min ~ Max)	℃	15 ~ 80*	15 ~ 80*
Water Pump	Type	-	-	-
	Model(Maker,Name)	-	-	-
	Motor type	-	-	-
	Steps of Pumping Performance	-	-	-
	Power input(Min~Max)	W	-	-
	Max. Head	m	-	-
Expansion Tank	Volume(Max)	ℓ	8	8
	Water Pressure(Max)	bar	3	3
	Water Pressure(Pre-charged)	bar	1	1
Strainer	Mesh size	mesh	-	-
	Max. particle size	mm	-	-
	Material	-	-	-
Safety Valve(Water cycle)	Pressure Limit(Upper Limit)	bar	-	-
Safety Valve(DHW)	Pressure Limit(Upper Limit)	bar	10	10
3 Way Valve	Model(Maker,Name)	-	Sanhua QSF-A02M20	Sanhua QSF-A02M21
	Motor Type	-	2-2 Step motor(DC 12V)	2-2 Step motor(DC 12V)
	Flow coefficient	Kvs	12	12
Flow Sensor	Type	-	-	-
	Model(Maker,Name)	-	-	-
	Measuring Range(Min~Max)	ℓ /min	-	-
Water Pressure Sensor	Model(Maker,Name)	-	-	-
	Measuring Range(Min~Max)	bar(G)	-	-
DHW Tank	Type	-	Internal coil type integrated hot water tank	Internal coil type integrated hot water tank
	Water Volume	L	200	200
	Material	-	Duplex 2205	Duplex 2205
	Internal Thermal Protect limit	℃	85	85
	Pressure Limit(Max.)	MPa (bar)	1 (10)	1 (10)
DHW Tank Insulation	Material	-	Polyurethane foam	Polyurethane foam
	Thickness	mm	50	50
Electric backup heater	Type	-	Sheath	Sheath
	Power supply	V, Φ, Hz	220-240, 1, 50	380-415, 3, 50
	Number of heating coil	EA	2	3
	Capacity combination	kW	3.0 + 3.0	3.0 + 3.0 + 3.0
	Rated running current	A	26.0	13.0
	Maximum Electrical Power	kW	6	9
	Power cable(H07RN-F) (included earth)	mm² × cores	4.0 x 3C	2.5 x 4C
Heat Exchanger(Water/DHW)	Type	-	Coil Heat Exchanger	Coil Heat Exchanger
	Quantity	EA	1	1
	Surface area	m²	1.81	1.81
Heat Exchanger(Refrigerant to Water)	Type	-	-	-
	Quantity	EA	-	-
	Number of Plate	Sheet	-	-
Refrigerant Piping Connection	Liquid	mm(inch)	-	-
	Gas	mm(inch)	-	-
	Connection Type(Liquid)	-	-	-
	Connection Type(Gas)	-	-	-
Water connecting pipes	Inlet	inch	Female G1" according to ISO228-1(parallel pipe threads)	Female G1" according to ISO228-1(parallel pipe threads)
	Outlet	inch	Female G1" according to ISO228-1(parallel pipe threads)	Female G1" according to ISO228-1(parallel pipe threads)
DHW Connecting Pipes	Inlet	inch	Female G1" according to ISO228-1(parallel pipe threads)	Female G1" according to ISO228-1(parallel pipe threads)
	Outlet	inch	Female G1" according to ISO228-1(parallel pipe threads)	Female G1" according to ISO228-1(parallel pipe threads)
	Re-circulation	inch	Female G1" according to ISO228-1(parallel pipe threads)	Female G1" according to ISO228-1(parallel pipe threads)
Sound power level	Heating (rated)	dB(A)	39.0	39.0
Dimensions	Net(W x H x D)	mm	600 x 1,750 x 660	600 x 1,750 x 660
	Shipping(W x H x D)	mm	660 x 2,009 x 750	660 x 2,009 x 750
Weight	Net	kg	106.5	107.0
	Shipping	kg	125.5	126.0

1. Specifications

Category		Unit	FHNW20606Y0 [HN1616HY NK0]	FHNW20809Y0 [HN1639HY NK0]
Major	Minor			
Exterior	Color of chassis	-	Noble White	Noble White
	RAL Code of chassis	-	RAL 9016	RAL 9016
Connecting cable	Power and Communication cable (H07RN-F, included earth)	mm² × cores	0.75 x 3C / 0.75 x 2C	0.75 x 3C / 0.75 x 2C

Note

1. Due to our policy of innovation some specifications may be changed without notification.
2. Wiring cable size must comply with the applicable local and national code. And "Electric characteristics" chapter should be considered for electrical work and design. Especially the power cable and circuit breaker should be selected in accordance with that.
3. Sound power level is measured on the rated condition in accordance with ISO 9614 standard.
   Therefore, these values depend on the ambient conditions and values are normally higher in actual operation.
4. * DHW 65~80°C operating is available only when the booster heater is operating.

2. List of functions

Category	Functions	FHNW20606Y0 [HN1616HY NK0]	FHNW20809Y0 [HN1639HY NK0]
Reliability	Self diagnosis	O	O
Convenience	Auto Restart	O	O
	Child Lock	O	O
	Group Control	X	X
	Sleep Timer	O	O
	Turn On/Off Reservation	O	O
	Schedule	O	O
	Low Noise Operation	O	O
Installation	Electric Backup Heater	O	O
	Domestic Hot Water Tank heater	O (by Electric Backup Heater)	O (by Electric Backup Heater)
Water Product functions	Water Pump Pre-run / Over-run control	X	X
	Water Pump Forced Operation	O	O
	Water Pump Speed Control	-	-
	Water Flow Detection by Flow Sensor	O	O
	Water Flow Control	O	O
	Water Pressure Monitoring	O	O
	Thermostat Interface (230V AC)	O	O
	Thermostat Interface (24V AC)	X	X
	One Point Dry Contact Input (CN-EXT)	O	O
	Digital Output For External Pump	O	O
	Digital inputs for energy saving (Ready for Smart Grid)	O	O
	Communication with LG ESS by Modbus	O	O
	Anti-Condensation on Floor (cooling)	O	O
	Anti-Freezing Control	O	O
	Anti-overheating Of Water Pipe	O	O
	Emergency Operation	O	O
	Weather dependent operation with thermostat	O	O
	Seasonal auto mode (heating and cooling)	O	O
	DHW(Domestic Hot Water) Tank Kit	O(Integrated)	O(Integrated)
	Scheduler (DHW Tank Heater)	O	O
	Timer (DHW Tank Heater)	O	O
	Quick DHW Tank Heating	O	O
	DHW Recirculation	O	O
	Tank Disinfection	-	-
	Electric Heater Capacity Control	-	-
	Solar thermal function	X	X
	Screed Drying Mode	O	O
	Current Flow Rate Monitoring	-	-
	Energy Monitoring	O	O
Special Functions	Wi-Fi Control	Accessory	Accessory
	Modbus connectivity (without gateway)	O	O
	Remote room temperature sensing	Accessory	Accessory
	Outdoor Temperature sensing	Accessory	Accessory
	2nd Circuit (Mixing Circuit)	Accessory(3rd party)	Accessory(3rd party)
	2-Remo control	Accessory	Accessory

Note

1. O : Applied, X : Not applied
   Accessory : Ordered and purchased separately the accessory package referring to the model name provided and install at field.
   Accessory line-ups varies by region, so check your local catalogue or local sales material.
2. Solar thermal system requires the 3rd party accessory, PT-1000 sensor. (field supply)

3. Accessory Compatibility List

Category	Accessory Name	Model Name	Descriptions	FHNW20606Y0 [HN1616HY NK0] FHNW20809Y0 [HN1639HY NK0]
Remote Controller	Wired - RS3 (Standard III)	PREMTW101	White	O
Dry Contact	Simple	PDRYCB000	1 input port, AC 220 - 240V	O
	Thermostat	PDRYCB320	8 input port, For 3rd Party Thermostat (Analog Input)	O
Integration Device	Remote Temperature sensor	PQRSTA0	Room temperature sensor, NTC 10kΩ, include casing	O
	Group Control wire	PZCWRCG3	Cable Assembly for group control (Y-type cable : 0.25m,cable : 9.6m)	X
ETC	Extension wire	PZCWRC1	Extension wire for IDU-wired remote controller (9.6m)	O
	2-Remo Control wire	PZCWRC2	Y-type cable to connect additional Remote Controller as slave	O
	Wi-Fi Modem	PWFMDD200	Device to use ThinQ app include connection cable	O
	Wi-Fi Extension cable	PWYREW000	USB Extension cable : 10 m	O
	Meter Interface	PENKTH000	Interface to connect 3rd-party heat and/or watt meter to indoor unit by S0 or Modbus	O
Special Kit	Solar-Thermal kit	PHLLA*	Limit Temperature : 96 ℃	X
	IDU Drain Pan	PHDPB	For Hydro Unit	X
		PHDPC	For Hydro Unit	X
	DHW tanks (Single coil)	OSHW-200F	200 L	X
		OSHW-300F	300 L	X
		OSHW-500F	500 L	X
	DHW tanks (Double coil)	OSHW-300FD	300 L	X
	DHW Heater kit	PHLTA	For Hydro Unit and Control Unit(except for HN1639 NK3)	X
		PHLTC	For Hydro Unit (HN1639 NK3)	X
	Wall mounted outdoor air temp. sensor	PHATS0	For measuring outside temperature	O
	Thermistor for Water Tank (Buffer Tank, DHW Tank)	PHRSTA0**	Included in DHW Tank kit	O
	Thermostatic Mixing valve	OSHA-MV	3/4" DN20	O
		OSHA-MV1	1" DN25	O
	3way valve	OSHA-3V	Diverting valve between space heating and DHW heating	X
	Thermistor for 2nd Circuit	PRSTAT5K10	NTC 5kΩ sensor needed to control mixing circuit or if 3rd party backup heater is used	O
	Backup Heater	HA031M E1	1Ø, 3kW (For Monobloc)	X
		HA061M E1	1Ø, 6kW (For Monobloc)	X
		HA063M E1	3Ø, 6kW (For Monobloc)	X
		HA031M E2	1Ø, 3kW (For Monobloc)	X
		HA061M E2	1Ø, 6kW (For Monobloc)	X
		HA063M E2	3Ø, 6kW (For Monobloc)	X
		HA061B E1	1Ø, 6kW (For Hydrosplit, HN1600MB NK0)	X
		HA061C E1	1Ø, 6kW (For Hydrosplit, HN1600MC NK1)	X
		HA063B E1	3Ø, 6kW (For Hydrosplit, HN1600MB NK0)	X
		HA063C E1	3Ø, 6kW (For Hydrosplit, HN1600MC NK1)	X
	Cover plate	PDC-HK10	For Combi Unit and Hydro Unit Type indoor units	O

Note

1. O: Possible, X: Impossible, - : Not applicable, Embedded : Included with product.
2. Some advanced functions controlled by individual controller cannot be operated.
3. If there is a difference in development time between the product and the remote controller, some functions cannot be operated.
4. Meter interface cannot be connected at the same time with 3rd-party controller.
5. * : It includes double-sensor for solar tank. The collector sensor (PT1000) needs to be supplied locally.
   ** : PHRSTA0 can only be used for buffer tank sensor.
6. If you need more detail, please refer to the control(***BECON***) PDB or the manual of product. (http://partner.lge.com > Select Your Region : Home> Doc.Library> Product > Control(BECON)).

4. Dimensions

■ External : FHNW20606Y0 [HN1616HY NK0], FHNW20809Y0 [HN1639HY NK0]

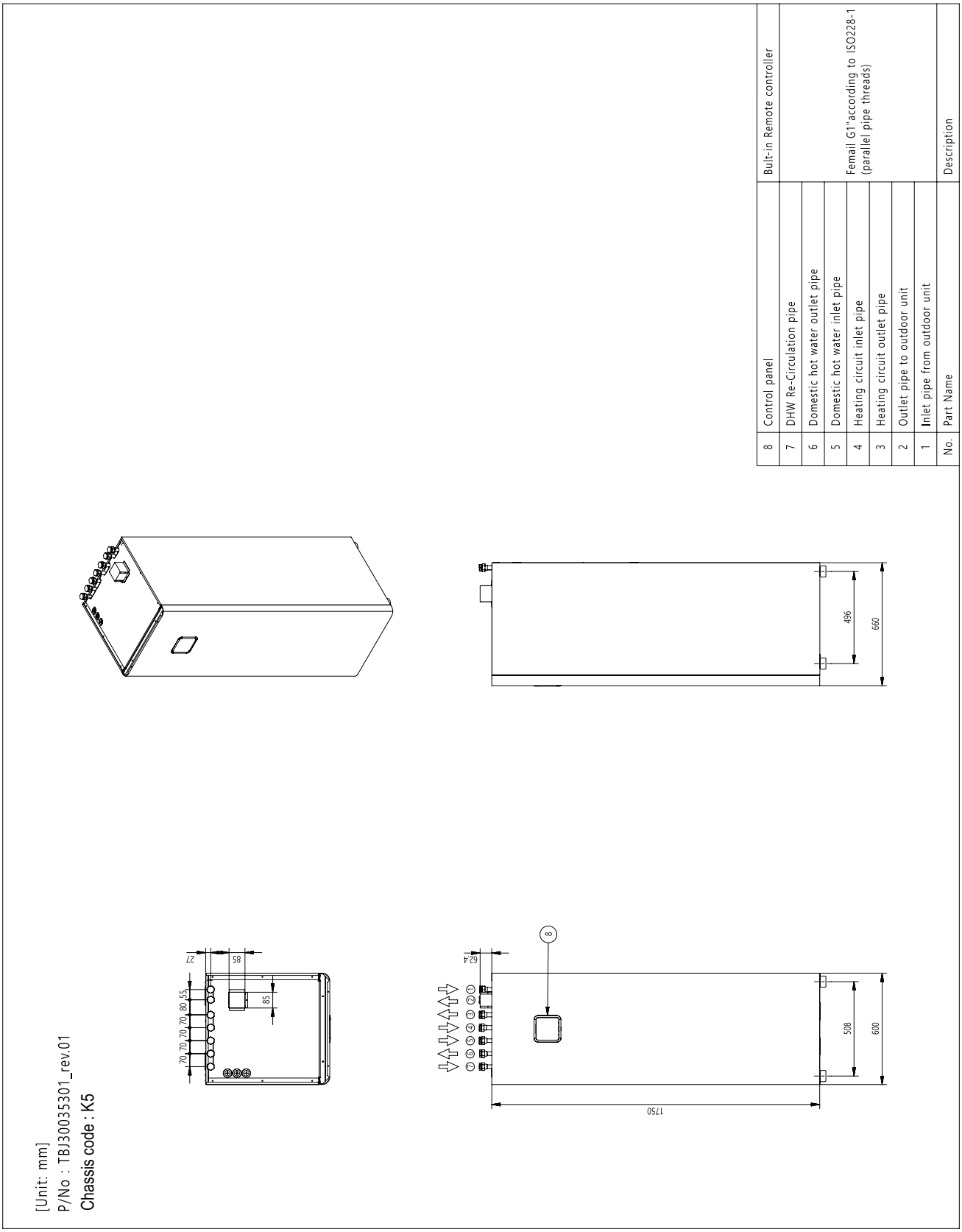

4. Dimensions

■ Internal : FHNW20606Y0 [HN1616HY NK0], FHNW20809Y0 [HN1639HY NK0]

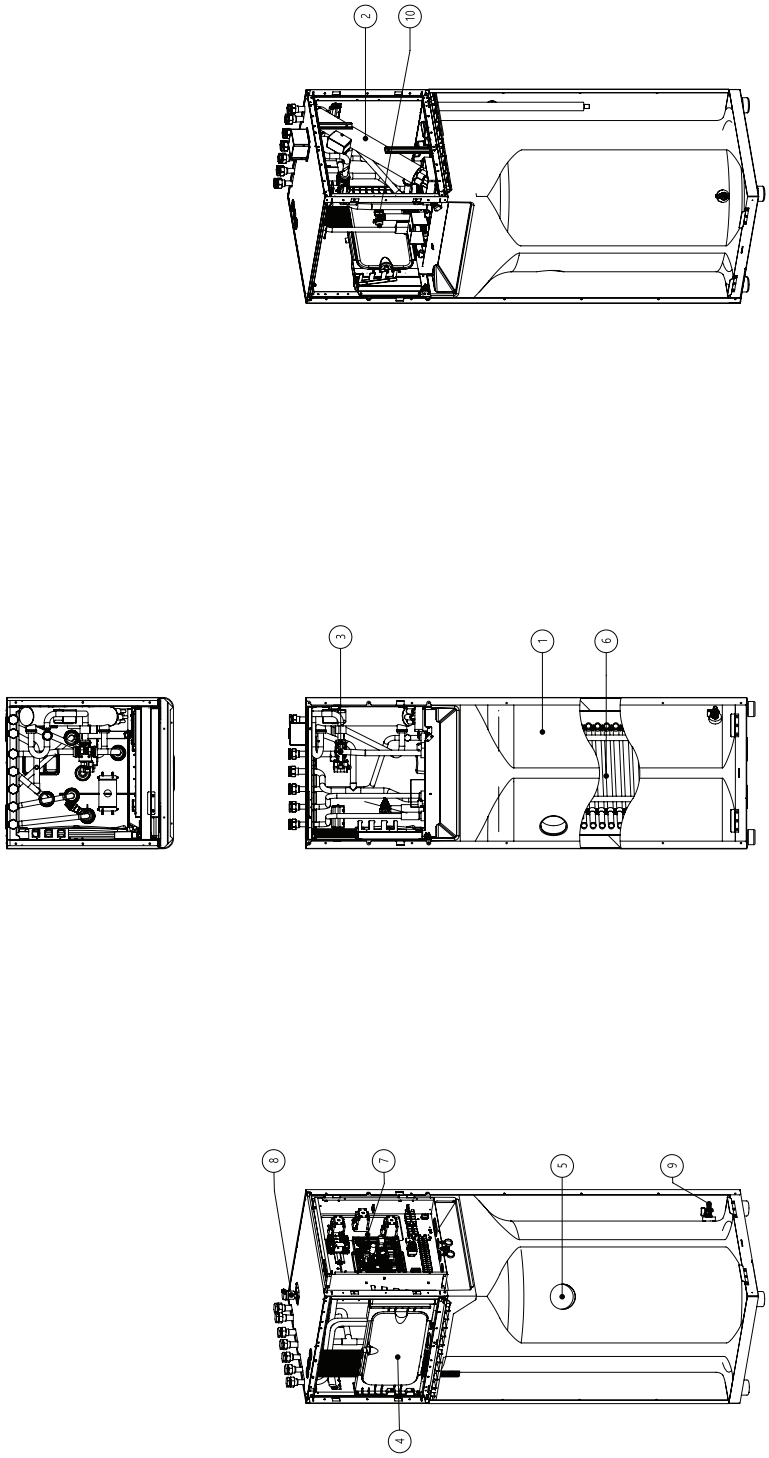

No.	Part Name	Description
10	Safety Valve	For DHW (10 bar)
9	Drain cock1	Valve for DHW Tank drain
8	Air vent	For Air purging
7	Control Box	PCB'A and Terminal blocks
6	Heat exchanger	Coil Heat Exchanger(water/DHW)
5	DHW tank sensor	Temperature sensor
4	Expansion vessel	8L for Heating circuit
3	3Way valve	For DHW / Heating
2	Heater	Electric heater(1∅ 6kW, 3∅ 9kW)
1	DHW Tank	Domestic hot water tank(200L)

[Unit: mm]
P/No : TBJ30035301_rev.01
Chassis code : K5

5. Piping Diagram

■ FHNW20606Y0 [HN1616HY NK0], FHNW20809Y0 [HN1639HY NK0]

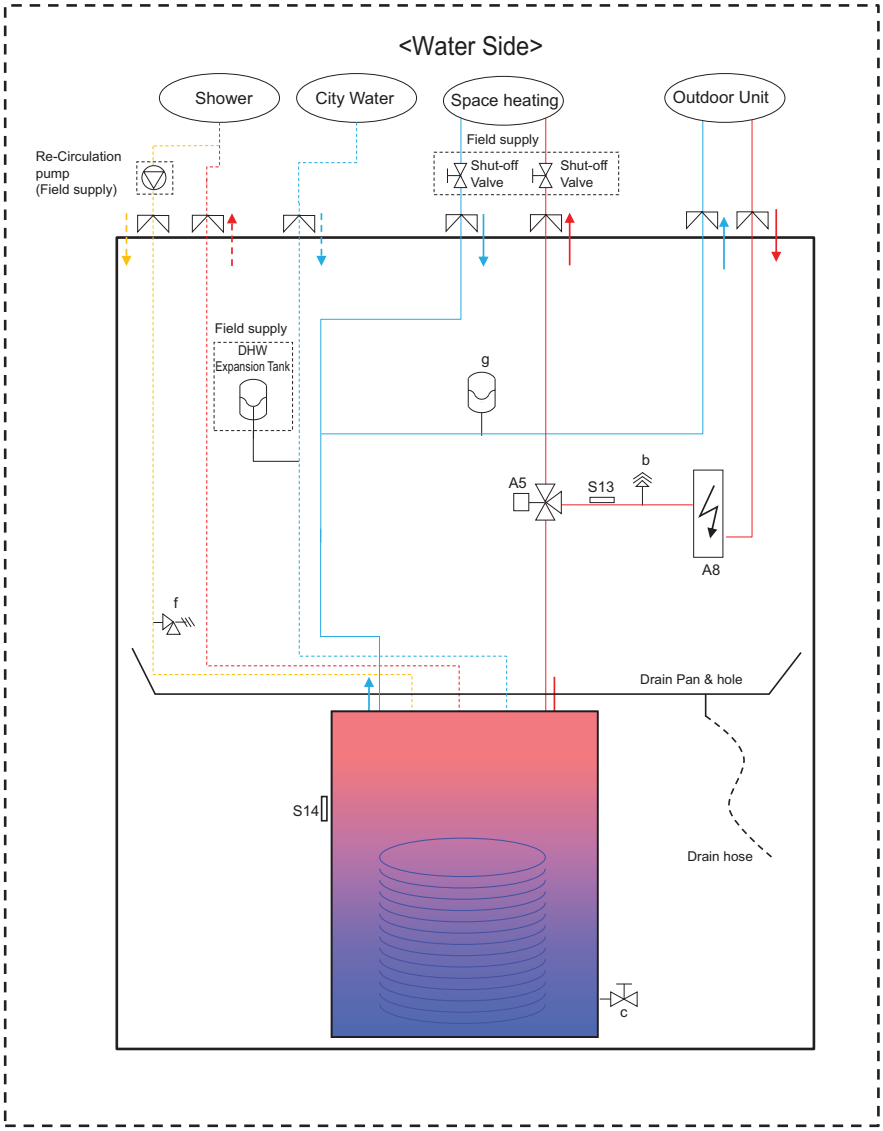

Category	Symbol	Meaning
Water Side	S13	Electric heater outlet sensor
	S14	DHW tank temperature sensor
	A5	3Way Valve
	A8	Electric backup heater
	b	Air vent
	c	Drain valve
	f	Safety valve(DHW tank, 10bar)
	g	Expansion Tank(8L)

6. Wiring Diagram

■ FHNW20606Y0 [HN1616HY NK0]

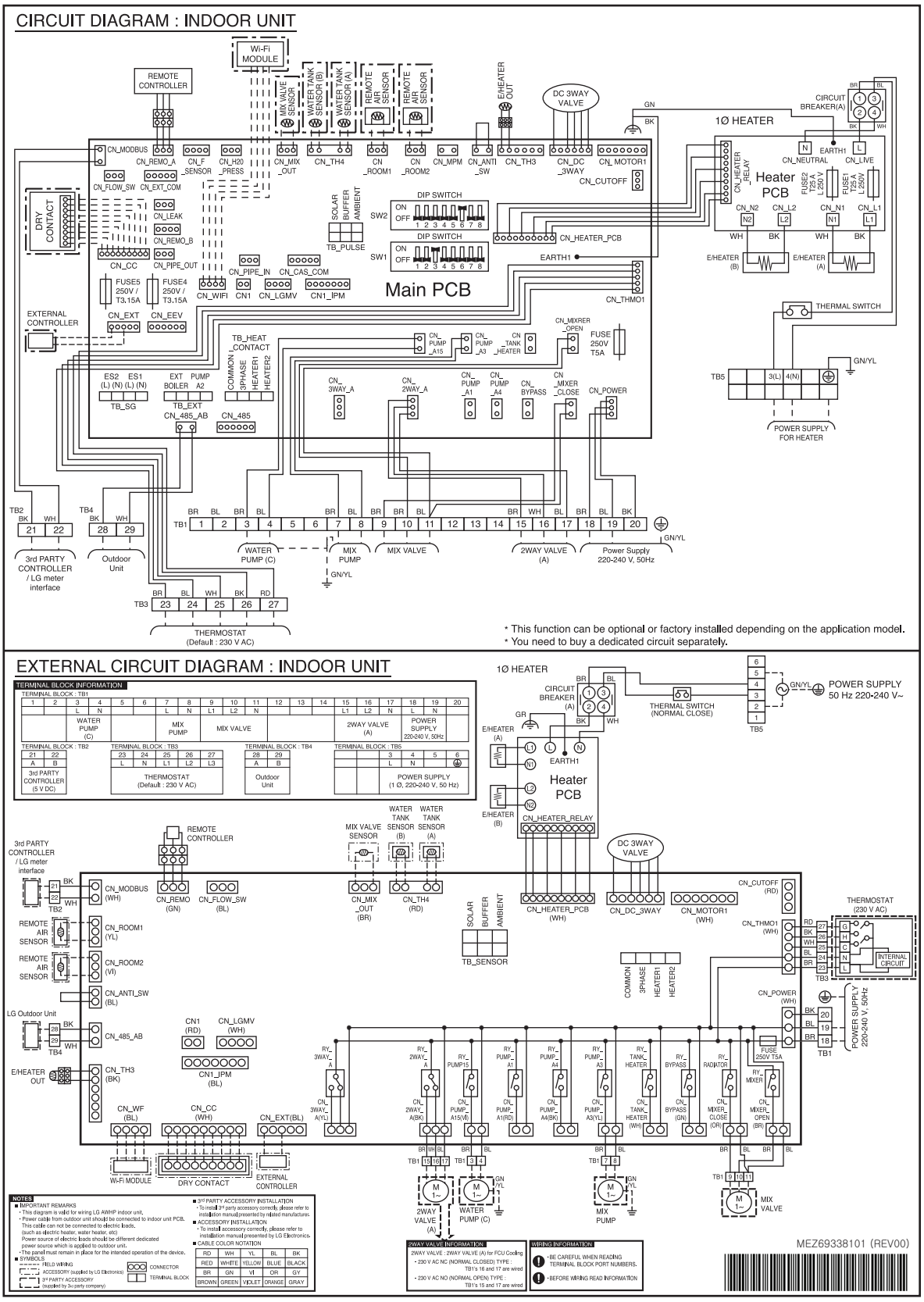

6. Wiring Diagram

■ FHNW20809Y0 [HN1639HY NK0]

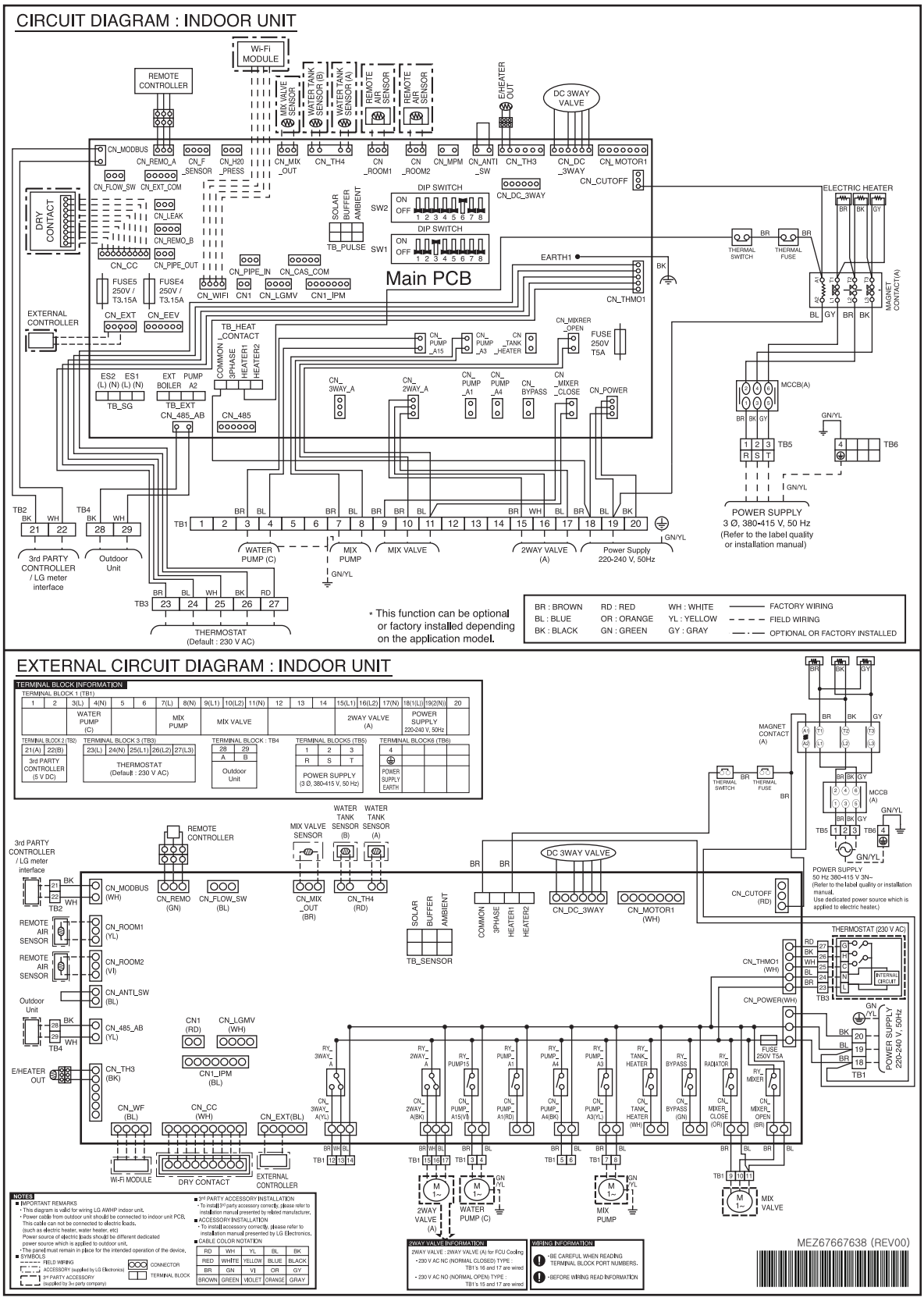

Monobloc

1. Specifications
2. List of Functions
3. Accessory Compatibility List
4. Dimensions
5. Piping Diagrams
6. Wiring Diagrams
7. Performance Data
8. Operation Range
9. Sound levels
10. Hydraulic Performance

1. Specifications

■ 1Φ Models

Performance specifications					FHBW076B0 [HM071HF UB40]	FHBW096B0 [HM091HF UB40]
-	-	Outdoor temp. (°CDB)	Leaving water temp. (°C)	-		
Capacity	Heating	7	35	kW	7.0	9.0
			55	kW	4.5	5.5
		2	35	kW	7.0	8.0
		-7	35	kW	7.0	9.0
			55	kW	7.0	8.0
	Cooling	35	18	kW	5.0	5.5
			7	kW	5.0	5.5
Power input	Heating	7	35	kW	1.40	1.91
			55	kW	1.34	1.67
		2	35	kW	1.84	2.16
		-7	35	kW	2.50	3.33
			55	kW	2.92	3.64
	Cooling	35	18	kW	1.14	1.31
			7	kW	1.79	2.12
COP	Heating	7	35	W/W	5.0	4.7
			55	W/W	3.35	3.3
		2	35	W/W	3.8	3.7
		-7	35	W/W	2.8	2.7
			55	W/W	2.4	2.2
EER	Cooling	35 / 24	18	W/W	4.4	4.2
			7	W/W	2.8	2.6
Seasonal space heating eff. class			35	-	A+++	A+++
			55	-	A+++	A+++
Seasonal space heating efficiency (η_S)			35	-	207	205
			55	-	151	151
SCOP(average climate)			35	W/W	5.24	5.20
			55	W/W	3.86	3.86
Water Heating Efficiency (profile L)				%	130	130
Water flow rate		Rated(at ΔT 5°C)		ℓ /min	20.1	25.9
Operation range (outdoor temperature)		Cooling#	Min.~Max.	°C(DB)	5~48	5~48
		Heating	Min.~Max.	°C(DB)	-28 ~ 35	-28 ~ 35

Electrical specifications			FHBW076B0 [HM071HF UB40]	FHBW096B0 [HM091HF UB40]
Power supply	Case 1	V, Ø, Hz	220-240, 1, 50	220-240, 1, 50
	Limit range of voltage	V	187 ~ 276	187 ~ 276
Running current	Heating(Rated)	A	6.5	8.3
	Cooling(Rated)	A	5.5	5.9
Peak control running current	Heating	A	15	16
	Cooling	A	14	15
Recommended circuit breaker(ELCB)		A	20	20
Standby power consumption		W	10	10
Connecting cable	Power supply cable (included Earth, H07RN-F)	mm² x cores	2.5 x 3C	2.5 x 3C
	Communication cable (H07RN-F)	mm² x cores	0.75 x 2C	0.75 x 2C

Technical specifications			FHBW076B0 [HM071HF UB40]	FHBW096B0 [HM091HF UB40]
Refrigerant	Type	-	R290	R290
	Precharged amount	kg	0.9	0.9
	GWP	-	3	3
	t-CO_2 eq.	-	0.0027	0.0027
	Control type	-	Electronic expansion valve	Electronic expansion valve
Compressor	Type	-	Hermetic motor compressor	Hermetic motor compressor
	Model x No.	-	PRJA032MAA x 1	PRJA032MAA x 1
	Piston displacement	cm³/rev	31.6	31.6
	Motor type	-	BLDC	BLDC
Refrigerant oil	Type	-	PZ68S	PZ68S
	Charged volume	cc x No.	1100	1100
Fan	Type	-	Propeller	Propeller
	Air flow rate (rated)	m³/min	62 x 1	68 x 1
Fan motor	Type	-	BLDC	BLDC
	Output	W x No.	124 x 1	124 x 1
Heat exchanger	Rows x columns x FPI	-	46 x 2 x 18	46 x 2 x 18
	No.	EA	1	1
	Fin type	-	Corrugate	Corrugate

1. Specifications

Technical specifications				FHBW076B0 [HM071HF UB40]	FHBW096B0 [HM091HF UB40]
Water pump**	Type		-	Canned type for hot water circulation	Canned type for hot water circulation
	Model (maker, name)		-	OH SUNG, ODM-061P	OH SUNG, ODM-061P
	Motor type		-	BLDC	BLDC
	Steps of pumping performance		-	Variable speed 10% to 100%	Variable speed 10% to 100%
	Power input	Min.~Max.	W	17 ~ 152	17 ~ 152
		Rated	W	110	110
	Max. head		m	11	11
Water pump 2**	Type		-	Canned type for hot water circulation	Canned type for hot water circulation
	Model (maker, name)		-	GRUNDFOS, UPM3K 20-75CHBL	GRUNDFOS, UPM3K 20-75CHBL
	Motor type		-	BLDC	BLDC
	Steps of pumping performance		-	Variable speed 10% to 100%	Variable speed 10% to 100%
	Power input	Min.~Max.	W	3 ~ 60	3 ~ 60
		Rated	W	60	60
	Max. head		m	7.5	7.5
Heat exchanger (refrigerant to water)	Type		-	Brazed plate HEX	Brazed plate HEX
	No.		-	1	1
	Number of plate		EA	54	54
	Water volume		ℓ	0.7	0.7
Water strainer	Supply type		-	Loose supply (externally installed)	Loose supply (externally installed)
	Mesh size		mesh	30	30
	Max. particle size		mm	0.6	0.6
	Material		-	Stainless steel	Stainless steel
Safety valve (water cycle)	Pressure limit	Upper limit	bar	3.0	3.0
Flow sensor	Type		-	Vortex	Vortex
	Model(maker,name)		-	SIKA VVXC9SNBUC00242P	SIKA VVXC9SNBUC00242P
	Measuring range	Min. ~ Max.	ℓ /min	5 ~ 80	5 ~ 80
	Trigger point		ℓ /min	5	5
Water pressure sensor	Model (maker, name)		-	Sensata OFM(2HMP)	Sensata OFM(2HMP)
	Measuring range	Min. ~ Max.	bar	0 ~ 20	0 ~ 20
Sound pressure level	Heating(rated, @5m)		dB(A)	27	28
Sound power level	Heating	Low noise	dB(A)	48	48
		Rated	dB(A)	49	50
		Daytime max.	dB(A)	58	60
Water connecting pipes	Inlet		inch	Male PT 1" according to ISO 7-1 (tapered pipe threads)	Male PT 1" according to ISO 7-1 (tapered pipe threads)
	Outlet		inch	Male PT 1" according to ISO 7-1 (tapered pipe threads)	Male PT 1" according to ISO 7-1 (tapered pipe threads)
Dimensions	Net(W x H x D)		mm	1,320 x 1,019 x 520	1,320 x 1,019 x 520
	Shipping(W x H x D)		mm	1,380 x 1,180 x 625	1,380 x 1,180 x 625
Weight	Net		kg	130.0	130.0
	Shipping		kg	147.0	147.0
Exterior	Color of chassis		-	Dawn gray	Dawn gray
	RAL Code of chassis		-	RAL 7037	RAL 7037

Note

1. Due to our policy of innovation, some specifications may be changed without notification.
2. Wiring cable size must comply with the applicable local and national codes. And "Electric characteristics" chapter should be considered for electrical work and design. Especially the power cable and circuit breaker should be selected in accordance with that.
3. Sound power level is measured in accordance with EN 12102-1 and ISO 9614.
   - Rated : This mode is measured on the rated condition in the semi-anechoic rooms. Therefore, these values may vary depending on operation conditions.
   - Daytime max : This mode is measured based on max. fan RPM and max. compressor Hz. that can be reached under outdoor air temperature 2°C.
   - Low noise : This mode lowers noise by limiting the compressor Hz. and fan RPM, and thus the performance may be limited.
4. Performances are accordance with EN14511 and reflect ErP testing conditions. The values indicated above are the declared values at rated conditions acc. ErP regulation. For max. capacities, please refer to Performance Data.
5. This product contains Fluorinated greenhouse gases.
6. SCOP is in accordance with EN14825.
7. Rated running currents are based on the declared values under the following conditions.
   - Heating : Outdoor Temp. 7°CDB / 6°CWB, Leaving Water Temp. 35℃
   - Cooling : Outdoor Temp. 35°C(DB) / 24°C(WB), Leaving Water Temp. 18°C
8. All installation sites must be equipped with an earth leakage circuit breaker (ELCB).

   * DHW 65~80°C Operating is available only when the booster heater is operating.

   ** In the case of integrated water pump, either water pump or water pump 2 will be applied.

   # This operation range includes not only the continuous operation range but also operative range.

1. Specifications

Performance specifications					FHBW126B0 [HM121HF UB60]	FHBW146B0 [HM141HF UB60]
-	-	Outdoor temp. (°CDB)	Leaving water temp. (°C)	-		
Capacity	Heating	7	35	kW	12.0	14.0
			55	kW	10.0	11.0
		2	35	kW	12.0	14.0
		-7	35	kW	11.8	13.0
			55	kW	9.3	10.3
	Cooling	35	18	kW	11.5	12.0
			7	kW	10.5	12.0
Power input	Heating	7	35	kW	2.55	3.11
			55	kW	3.23	3.38
		2	35	kW	3.23	3.88
		-7	35	kW	3.61	4.05
			55	kW	4.01	4.52
	Cooling	35	18	kW	3.04	3.24
			7	kW	3.37	4.01
COP	Heating	7	35	W/W	4.70	4.50
			55	W/W	3.10	3.25
		2	35	W/W	3.72	3.61
		-7	35	W/W	3.27	3.21
			55	W/W	2.32	2.28
EER	Cooling	35 / 24	18	W/W	3.78	3.70
			7	W/W	3.12	2.99
Seasonal space heating eff. class			35	-	A+++	A+++
			55	-	A+++	A+++
Seasonal space heating efficiency (η_S)			35	-	215	212
			55	-	156	155
SCOP(average climate)			35	W/W	5.45	5.38
			55	W/W	3.97	3.96
Water Heating Efficiency (profile L)				%	130	130
Water flow rate		Rated(at ΔT 5℃)		ℓ /min	34.5	40.3
Operation range (outdoor temperature)		Cooling#	Min.~Max.	°C(DB)	5~48	5~48
		Heating	Min.~Max.	°C(DB)	-28 ~ 35	-28 ~ 35

Electrical specifications			FHBW126B0 [HM121HF UB60]	FHBW146B0 [HM141HF UB60]
Power supply	Case 1	V, Ø, Hz	220-240, 1, 50	220-240, 1, 50
	Limit range of voltage	V	187 ~ 276	187 ~ 276
Running current	Heating(Rated)	A	11.10	13.53
	Cooling(Rated)	A	12.66	13.38
Peak control running current	Heating	A	20	20
	Cooling	A	20	20
Recommended circuit breaker(ELCB)		A	25	25
Standby power consumption		W	10	10
Connecting cable	Power supply cable (included Earth, H07RN-F)	mm² x cores	2.5 x 3C	2.5 x 3C
	Communication cable (H07RN-F)	mm² x cores	0.75 x 2C	0.75 x 2C

Technical specifications			FHBW126B0 [HM121HF UB60]	FHBW146B0 [HM141HF UB60]
Refrigerant	Type	-	R290	R290
	Precharged amount	kg	1.2	1.2
	GWP	-	3	3
	t-CO_2 eq.	-	0.0036	0.0036
	Control type	-	Electronic expansion valve	Electronic expansion valve
Compressor	Type	-	Hermetic motor compressor	Hermetic motor compressor
	Model x No.	-	PJQC062MAA x 1	PJQC062MAA x 1
	Piston displacement	cm³/rev	61.5	61.5
	Motor type	-	BLDC	BLDC
Refrigerant oil	Type	-	PZ68S	PZ68S
	Charged volume	cc x No.	1200	1200
Fan	Type	-	Propeller	Propeller
	Air flow rate (rated)	m³/min	110 x 1	110 x 1
Fan motor	Type	-	BLDC	BLDC
	Output	W x No.	250 x 1	250 x 1
Heat exchanger	Rows x columns x FPI	-	46 x 3 x 18	46 x 3 x 18
	No.	EA	1	1
	Fin type	-	Corrugate	Corrugate

1. Specifications

Technical specifications				FHBW126B0 [HM121HF UB60]	FHBW146B0 [HM141HF UB60]
Water pump**	Type		-	Canned type for hot water circulation	Canned type for hot water circulation
	Model (maker, name)		-	GRUNDFOS, UPML GEO 20-105 CHBL	GRUNDFOS, UPML GEO 20-105 CHBL
	Motor type		-	BLDC	BLDC
	Steps of pumping performance		-	Variable speed 10% to 100%	Variable speed 10% to 100%
	Power input	Min.~Max.	W	17~152	17~152
		Rated	W	145	145
	Max. head		m	11	11
Water pump 2**	Type		-	Canned type for hot water circulation	Canned type for hot water circulation
	Model (maker, name)		-	OH SUNG, ODM-061P	OH SUNG, ODM-061P
	Motor type		-	BLDC	BLDC
	Steps of pumping performance		-	Variable speed 10% to 100%	Variable speed 10% to 100%
	Power input	Min.~Max.	W	17 ~ 152	17 ~ 152
		Rated	W	145	145
	Max. head		m	11	11
Heat exchanger (refrigerant to water)	Type		-	Brazed plate HEX	Brazed plate HEX
	No.		-	1	1
	Number of plate		EA	76	76
	Water volume		ℓ	1	1
Water strainer	Supply type		-	Loose supply (externally installed)	Loose supply (externally installed)
	Mesh size		mesh	30	30
	Max. particle size		mm	0.6	0.6
	Material		-	Stainless steel	Stainless steel
Safety valve (water cycle)	Pressure limit	Upper limit	bar	3.0	3.0
Flow sensor	Type		-	Vortex	Vortex
	Model(maker,name)		-	SIKA VVXC9SNBUC00252P	SIKA VVXC9SNBUC00252P
	Measuring range	Min. ~ Max.	ℓ /min	5 ~ 80	5 ~ 80
	Trigger point		ℓ /min	10	10
Water pressure sensor	Model (maker, name)		-	Sensata OFM(2HMP)	Sensata OFM(2HMP)
	Measuring range	Min. ~ Max.	bar	0 ~ 20	0 ~ 20
Sound pressure level	Heating(rated, @5m)		dB(A)	27	29
Sound power level	Heating	Low noise	dB(A)	48	50
		Rated	dB(A)	49	51
		Daytime max.	dB(A)	59	60
Water connecting pipes	Inlet		inch	Male PT 1" according to ISO 7-1 (tapered pipe threads)	
	Outlet		inch	Male PT 1" according to ISO 7-1 (tapered pipe threads)	
Dimensions	Net(W x H x D)		mm	1,560 x 1,019 x 520	1,560 x 1,019 x 520
	Shipping(W x H x D)		mm	1,620 x 1,200 x 574	1,620 x 1,200 x 574
Weight	Net		kg	181.0	181.0
	Shipping		kg	199.0	199.0
Exterior	Color of chassis		-	Dawn gray	Dawn gray
	RAL Code of chassis		-	RAL 7037	RAL 7037

Note

1. Due to our policy of innovation, some specifications may be changed without notification.
2. Wiring cable size must comply with the applicable local and national codes. And "Electric characteristics" chapter should be considered for electrical work and design. Especially the power cable and circuit breaker should be selected in accordance with that.
3. Sound power level is measured in accordance with EN 12102-1 and ISO 9614.
   - Rated : This mode is measured on the rated condition in the semi-anechoic rooms. Therefore, these values may vary depending on operation conditions.
   - Daytime max : This mode is measured based on max. fan RPM and max. compressor Hz. that can be reached under outdoor air temperature 2°C.
   - Low noise : This mode lowers noise by limiting the compressor Hz. and fan RPM, and thus the performance may be limited.
4. Performances are accordance with EN14511 and reflect ErP testing conditions. The values indicated above are the declared values at rated conditions acc. ErP regulation. For max. capacities, please refer to Performance Data.
5. This product contains Fluorinated greenhouse gases.
6. SCOP is in accordance with EN14825.
7. Rated running currents are based on the declared values under the following conditions.
   - Heating : Outdoor Temp. 7°CDB / 6°CWB, Leaving Water Temp. 35℃
   - Cooling : Outdoor Temp. 35°C(DB) / 24°C(WB), Leaving Water Temp. 18°C
8. All installation sites must be equipped with an earth leakage circuit breaker (ELCB).

* DHW 65~80°C Operating is available only when the booster heater is operating.

** In the case of integrated water pump, either water pump or water pump 2 will be applied.

This operation range includes not only the continuous operation range but also operative range.

1. Specifications

Performance specifications					FHBW166B0 [HM161HF UB60]
-	-	Outdoor temp. (°CDB)	Leaving water temp. (°C)	-	
Capacity	Heating	7	35	kW	16.0
			55	kW	12.0
		2	35	kW	14.5
		-7	35	kW	13.8
			55	kW	10.9
	Cooling	35	18	kW	12.5
			7	kW	12.5
Power input	Heating	7	35	kW	3.72
			55	kW	3.63
		2	35	kW	4.15
		-7	35	kW	4.35
			55	kW	4.82
	Cooling	35	18	kW	3.38
			7	kW	4.24
COP	Heating	7	35	W/W	4.30
			55	W/W	3.30
		2	35	W/W	3.49
		-7	35	W/W	3.17
			55	W/W	2.26
EER	Cooling	35 / 24	18	W/W	3.70
			7	W/W	2.95
Seasonal space heating eff. class			35	-	A+++
			55	-	A+++
Seasonal space heating efficiency (η_S)			35	-	201
			55	-	154
SCOP(average climate)			35	W/W	5.11
			55	W/W	3.92
Water Heating Efficiency (profile L)				%	130
Water flow rate		Rated(at ΔT 5℃)		ℓ /min	46.0
Operation range (outdoor temperature)		Cooling#	Min.~Max.	°C(DB)	5~48
		Heating	Min.~Max.	°C(DB)	-28 ~ 35

Electrical specifications			FHBW166B0 [HM161HF UB60]
Power supply	Case 1	V, Ø, Hz	220-240, 1, 50
	Limit range of voltage	V	187 ~ 276
Running current	Heating(Rated)	A	16.18
	Cooling(Rated)	A	14.30
Peak control running current	Heating	A	20
	Cooling	A	20
Recommended circuit breaker(ELCB)		A	25
Standby power consumption		W	10
Connecting cable	Power supply cable (included Earth, H07RN-F)	mm² x cores	2.5 x 3C
	Communication cable (H07RN-F)	mm² x cores	0.75 x 2C

Technical specifications			FHBW166B0 [HM161HF UB60]
Refrigerant	Type	-	R290
	Precharged amount	kg	1.2
	GWP	-	3
	t-CO_2 eq.	-	0.0036
	Control type	-	Electronic expansion valve
Compressor	Type	-	Hermetic motor compressor
	Model x No.	-	PJQC062MAA x 1
	Piston displacement	cm³/rev	61.5
	Motor type	-	BLDC
Refrigerant oil	Type	-	PZ68S
	Charged volume	cc x No.	1200
Fan	Type	-	Propeller
	Air flow rate (rated)	m³/min	110 x 1
Fan motor	Type	-	BLDC
	Output	W x No.	250 x 1
Heat exchanger	Rows x columns x FPI	-	46 x 3 x 18
	No.	EA	1
	Fin type	-	Corrugate

1. Specifications

Technical specifications				FHBW166B0 [HM161HF UB60]
Water pump**	Type		-	Canned type for hot water circulation
	Model (maker, name)		-	GRUNDFOS, UPML GEO 20-105 CHBL
	Motor type		-	BLDC
	Steps of pumping performance		-	Variable speed 10% to 100%
	Power input	Min.~Max.	W	17~152
		Rated	W	145
	Max. head		m	11
Water pump 2**	Type		-	Canned type for hot water circulation
	Model (maker, name)		-	OH SUNG, ODM-061P
	Motor type		-	BLDC
	Steps of pumping performance		-	Variable speed 10% to 100%
	Power input	Min.~Max.	W	17 ~ 152
		Rated	W	145
	Max. head		m	11
Heat exchanger (refrigerant to water)	Type		-	Brazed plate HEX
	No.		-	1
	Number of plate		EA	76
	Water volume		ℓ	1
Water strainer	Supply type		-	Loose supply (externally installed)
	Mesh size		mesh	30
	Max. particle size		mm	0.6
	Material		-	Stainless steel
Safety valve (water cycle)	Pressure limit	Upper limit	bar	3.0
Flow sensor	Type		-	Vortex
	Model(maker,name)		-	SIKA VVXC9SNBUC00252P
	Measuring range	Min. ~ Max.	ℓ /min	5 ~ 80
	Trigger point		ℓ /min	10
Water pressure sensor	Model (maker, name)		-	Sensata OFM(2HMP)
	Measuring range	Min. ~ Max.	bar	0 ~ 20
Sound pressure level	Heating(rated, @5m)		dB(A)	30
Sound power level	Heating	Low noise	dB(A)	51
		Rated	dB(A)	52
		Daytime max.	dB(A)	61
Water connecting pipes	Inlet		inch	Male PT 1" according to ISO 7-1 (tapered pipe threads)
	Outlet		inch	Male PT 1" according to ISO 7-1 (tapered pipe threads)
Dimensions	Net(W x H x D)		mm	1,560 x 1,019 x 520
	Shipping(W x H x D)		mm	1,620 x 1,200 x 574
Weight	Net		kg	181.0
	Shipping		kg	199.0
Exterior	Color of chassis		-	Dawn gray
	RAL Code of chassis		-	RAL 7037

Note

1. Due to our policy of innovation, some specifications may be changed without notification.
2. Wiring cable size must comply with the applicable local and national codes. And "Electric characteristics" chapter should be considered for electrical work and design. Especially the power cable and circuit breaker should be selected in accordance with that.
3. Sound power level is measured in accordance with EN 12102-1 and ISO 9614.
   - Rated : This mode is measured on the rated condition in the semi-anechoic rooms. Therefore, these values may vary depending on operation conditions.
   - Daytime max : This mode is measured based on max. fan RPM and max. compressor Hz. that can be reached under outdoor air temperature 2°C.
   - Low noise : This mode lowers noise by limiting the compressor Hz. and fan RPM, and thus the performance may be limited.
4. Performances are accordance with EN14511 and reflect ErP testing conditions. The values indicated above are the declared values at rated conditions acc. ErP regulation. For max. capacities, please refer to Performance Data.
5. This product contains Fluorinated greenhouse gases.
6. SCOP is in accordance with EN14825.
7. Rated running currents are based on the declared values under the following conditions.
   - Heating : Outdoor Temp. 7°CDB / 6°CWB, Leaving Water Temp. 35℃
   - Cooling : Outdoor Temp. 35°C(DB) / 24°C(WB), Leaving Water Temp. 18°C
8. All installation sites must be equipped with an earth leakage circuit breaker (ELCB).

   * DHW 65~80°C Operating is available only when the booster heater is operating.

   ** In the case of integrated water pump, either water pump or water pump 2 will be applied.

   # This operation range includes not only the continuous operation range but also operative range.

1. Specifications

■ 3Φ Models

Performance specifications					FHBW078B0 [HM073HF UB40]	FHBW098B0 [HM093HF UB40]
-	-	Outdoor temp. (°CDB)	Leaving water temp. (°C)	-		
Capacity	Heating	7	35	kW	7.0	9.0
			55	kW	4.5	5.5
		2	35	kW	7.0	8.0
		-7	35	kW	7.0	9.0
			55	kW	7.0	8.0
	Cooling	35	18	kW	5.0	5.5
			7	kW	5.0	5.5
Power input	Heating	7	35	kW	1.40	1.91
			55	kW	1.34	1.67
		2	35	kW	1.84	2.16
		-7	35	kW	2.50	3.33
			55	kW	2.92	3.64
	Cooling	35	18	kW	1.14	1.31
			7	kW	1.79	2.12
COP	Heating	7	35	W/W	5.0	4.7
			55	W/W	3.35	3.3
		2	35	W/W	3.8	3.7
		-7	35	W/W	2.8	2.7
			55	W/W	2.4	2.2
EER	Cooling	35 / 24	18	W/W	4.4	4.2
			7	W/W	2.8	2.6
Seasonal space heating eff. class			35	-	A+++	A+++
			55	-	A+++	A+++
Seasonal space heating efficiency (η_S)			35	-	207	205
			55	-	151	151
SCOP(average climate)			35	W/W	5.24	5.20
			55	W/W	3.86	3.86
Water Heating Efficiency (profile L)				%	130	130
Water flow rate		Rated(at ΔT 5°C)		ℓ /min	20.1	25.9
Operation range (outdoor temperature)		Cooling#	Min.~Max.	°C(DB)	5~48	5~48
		Heating	Min.~Max.	°C(DB)	-28 ~ 35	-28 ~ 35

Electrical specifications			FHBW078B0 [HM073HF UB40]	FHBW098B0 [HM093HF UB40]
Power supply	Case 1	V, Ø, Hz	380-415, 3, 50	380-415, 3, 50
	Limit range of voltage	V	342~457	342~457
Running current	Heating(Rated)	A	2.8	3.6
	Cooling(Rated)	A	2.2	2.4
Peak control running current	Heating	A	7	8
	Cooling	A	7	8
Recommended circuit breaker(ELCB)		A	16	16
Standby power consumption		W	10	10
Connecting cable	Power supply cable (included Earth, H07RN-F)	mm² x cores	2.5 x 5C	2.5 x 5C
	Communication cable (H07RN-F)	mm² x cores	0.75 x 2C	0.75 x 2C

Technical specifications			FHBW078B0 [HM073HF UB40]	FHBW098B0 [HM093HF UB40]
Refrigerant	Type	-	R290	R290
	Precharged amount	kg	0.9	0.9
	GWP	-	3	3
	t-CO_2 eq.	-	0.0027	0.0027
	Control type	-	Electronic expansion valve	Electronic expansion valve
Compressor	Type	-	Hermetic motor compressor	Hermetic motor compressor
	Model x No.	-	PRJA032MAA x 1	PRJA032MAA x 1
	Piston displacement	cm³/rev	31.6	31.6
	Motor type	-	BLDC	BLDC
Refrigerant oil	Type	-	PZ68S	PZ68S
	Charged volume	cc x No.	1100	1100
Fan	Type	-	Propeller	Propeller
	Air flow rate (rated)	m³/min	62 x 1	68 x 1
Fan motor	Type	-	BLDC	BLDC
	Output	W x No.	124 x 1	124 x 1
Heat exchanger	Rows x columns x FPI	-	46 x 2 x 18	46 x 2 x 18
	No.	EA	1	1
	Fin type	-	Corrugate	Corrugate

1. Specifications

Technical specifications				FHBW078B0 [HM073HF UB40]	FHBW098B0 [HM093HF UB40]
Water pump**	Type		-	Canned type for hot water circulation	Canned type for hot water circulation
	Model (maker, name)		-	OH SUNG, ODM-061P	OH SUNG, ODM-061P
	Motor type		-	BLDC	BLDC
	Steps of pumping performance		-	Variable speed 10% to 100%	Variable speed 10% to 100%
	Power input	Min.~Max.	W	17 ~ 152	17 ~ 152
		Rated	W	110	110
	Max. head		m	11	11
Water pump 2**	Type		-	Canned type for hot water circulation	Canned type for hot water circulation
	Model (maker, name)		-	GRUNDFOS, UPM3K 20-75CHBL	GRUNDFOS, UPM3K 20-75CHBL
	Motor type		-	BLDC	BLDC
	Steps of pumping performance		-	Variable speed 10% to 100%	Variable speed 10% to 100%
	Power input	Min.~Max.	W	3 ~ 60	3 ~ 60
		Rated	W	60	60
	Max. head		m	7.5	7.5
Heat exchanger (refrigerant to water)	Type		-	Brazed plate HEX	Brazed plate HEX
	No.		-	1	1
	Number of plate		EA	54	54
	Water volume		ℓ	0.7	0.7
Water strainer	Supply type		-	Loose supply (externally installed)	Loose supply (externally installed)
	Mesh size		mesh	30	30
	Max. particle size		mm	0.6	0.6
	Material		-	Stainless steel	Stainless steel
Safety valve (water cycle)	Pressure limit	Upper limit	bar	3.0	3.0
Flow sensor	Type		-	Vortex	Vortex
	Model(maker,name)		-	SIKA VVXC9SNBUC00242P	SIKA VVXC9SNBUC00242P
	Measuring range	Min. ~ Max.	ℓ /min	5 ~ 80	5 ~ 80
	Trigger point		ℓ /min	5	5
Water pressure sensor	Model (maker, name)		-	Sensata OFM(2HMP)	Sensata OFM(2HMP)
	Measuring range	Min. ~ Max.	bar	0 ~ 20	0 ~ 20
Sound pressure level	Heating(rated, @5m)		dB(A)	27	28
Sound power level	Heating	Low noise	dB(A)	48	48
		Rated	dB(A)	49	50
		Daytime max.	dB(A)	58	60
Water connecting pipes	Inlet		inch	Male PT 1" according to ISO 7-1 (tapered pipe threads)	Male PT 1" according to ISO 7-1 (tapered pipe threads)
	Outlet		inch	Male PT 1" according to ISO 7-1 (tapered pipe threads)	Male PT 1" according to ISO 7-1 (tapered pipe threads)
Dimensions	Net(W x H x D)		mm	1,320 x 1,019 x 520	1,320 x 1,019 x 520
	Shipping(W x H x D)		mm	1,380 x 1,180 x 625	1,380 x 1,180 x 625
Weight	Net		kg	130.0	130.0
	Shipping		kg	147.0	147.0
Exterior	Color of chassis		-	Dawn gray	Dawn gray
	RAL Code of chassis		-	RAL 7037	RAL 7037

Note

1. Due to our policy of innovation, some specifications may be changed without notification.
2. Wiring cable size must comply with the applicable local and national codes. And "Electric characteristics" chapter should be considered for electrical work and design. Especially the power cable and circuit breaker should be selected in accordance with that.
3. Sound power level is measured in accordance with EN 12102-1 and ISO 9614.
   - Rated : This mode is measured on the rated condition in the semi-anechoic rooms. Therefore, these values may vary depending on operation conditions.
   - Daytime max : This mode is measured based on max. fan RPM and max. compressor Hz. that can be reached under outdoor air temperature 2°C.
   - Low noise : This mode lowers noise by limiting the compressor Hz. and fan RPM, and thus the performance may be limited.
4. Performances are accordance with EN14511 and reflect ErP testing conditions. The values indicated above are the declared values at rated conditions acc. ErP regulation. For max. capacities, please refer to Performance Data.
5. This product contains Fluorinated greenhouse gases.
6. SCOP is in accordance with EN14825.
7. Rated running currents are based on the declared values under the following conditions.
   - Heating : Outdoor Temp. 7°CDB / 6°CWB, Leaving Water Temp. 35℃
   - Cooling : Outdoor Temp. 35°C(DB) / 24°C(WB), Leaving Water Temp. 18°C
8. All installation sites must be equipped with an earth leakage circuit breaker (ELCB).

   * DHW 65~80°C Operating is available only when the booster heater is operating.

   ** In the case of integrated water pump, either water pump or water pump 2 will be applied.

   # This operation range includes not only the continuous operation range but also operative range.

1. Specifications

Performance specifications					FHBW098X0 [HM093HFX UB60]	FHBW128B0 [HM123HF UB60]
-	-	Outdoor temp. (°CDB)	Leaving water temp. (°C)	-		
Capacity	Heating	7	35	kW	9.0	12.0
			55	kW	9.0	10.0
		2	35	kW	9.0	12.0
		-7	35	kW	8.9	11.8
			55	kW	7.0	9.3
	Cooling	35	18	kW	9.0	11.5
			7	kW	9.0	10.5
Power input	Heating	7	35	kW	1.84	2.55
			55	kW	2.81	3.23
		2	35	kW	2.32	3.23
		-7	35	kW	2.59	3.61
			55	kW	2.88	4.01
	Cooling	35	18	kW	2.31	3.04
			7	kW	2.78	3.37
COP	Heating	7	35	W/W	4.90	4.70
			55	W/W	3.20	3.10
		2	35	W/W	3.88	3.72
		-7	35	W/W	3.44	3.27
			55	W/W	2.43	2.32
EER	Cooling	35 / 24	18	W/W	3.90	3.78
			7	W/W	3.24	3.12
Seasonal space heating eff. class			35	-	A+++	A+++
			55	-	A++	A+++
Seasonal space heating efficiency (η_S)			35	-	206	215
			55	-	147	156
SCOP(average climate)			35	W/W	5.23	5.45
			55	W/W	3.75	3.97
Water Heating Efficiency (profile L)				%	130	130
Water flow rate		Rated(at ΔT 5℃)		ℓ /min	25.9	34.5
Operation range (outdoor temperature)		Cooling#	Min.~Max.	°C(DB)	5~48	5~48
		Heating	Min.~Max.	°C(DB)	-28 ~ 35	-28 ~ 35

Electrical specifications			FHBW098X0 [HM093HFX UB60]	FHBW128B0 [HM123HF UB60]
Power supply	Case 1	V, Ø, Hz	380-415, 3, 50	380-415, 3, 50
	Limit range of voltage	V	342~457	342~457
Running current	Heating(Rated)	A	2.65	3.69
	Cooling(Rated)	A	3.21	4.20
Peak control running current	Heating	A	8	8
	Cooling	A	8	8
Recommended circuit breaker(ELCB)		A	16	16
Standby power consumption		W	10	10
Connecting cable	Power supply cable (included Earth, H07RN-F)	mm² x cores	2.5 x 5C	2.5 x 5C
	Communication cable (H07RN-F)	mm² x cores	0.75 x 2C	0.75 x 2C

Technical specifications			FHBW098X0 [HM093HFX UB60]	FHBW128B0 [HM123HF UB60]
Refrigerant	Type	-	R290	R290
	Precharged amount	kg	1.2	1.2
	GWP	-	3	3
	t-CO_2 eq.	-	0.0036	0.0036
	Control type	-	Electronic expansion valve	Electronic expansion valve
Compressor	Type	-	Hermetic motor compressor	Hermetic motor compressor
	Model x No.	-	PJQC062MAA x 1	PJQC062MAA x 1
	Piston displacement	cm³/rev	61.5	61.5
	Motor type	-	BLDC	BLDC
Refrigerant oil	Type	-	PZ68S	PZ68S
	Charged volume	cc x No.	1200	1200
Fan	Type	-	Propeller	Propeller
	Air flow rate (rated)	m³/min	110 x 1	110 x 1
Fan motor	Type	-	BLDC	BLDC
	Output	W x No.	250 x 1	250 x 1
Heat exchanger	Rows x columns x FPI	-	46 x 3 x 18	46 x 3 x 18
	No.	EA	1	1
	Fin type	-	Corrugate	Corrugate

1. Specifications

Technical specifications				FHBW098X0 [HM093HFX UB60]	FHBW128B0 [HM123HF UB60]
Water pump**	Type		-	Canned type for hot water circulation	Canned type for hot water circulation
	Model (maker, name)		-	GRUNDFOS, UPML GEO 20-105 CHBL	GRUNDFOS, UPML GEO 20-105 CHBL
	Motor type		-	BLDC	BLDC
	Steps of pumping performance		-	Variable speed 10% to 100%	Variable speed 10% to 100%
	Power input	Min.~Max.	W	17~152	17~152
		Rated	W	145	145
	Max. head		m	11	11
Water pump 2**	Type		-	Canned type for hot water circulation	Canned type for hot water circulation
	Model (maker, name)		-	OH SUNG, ODM-061P	OH SUNG, ODM-061P
	Motor type		-	BLDC	BLDC
	Steps of pumping performance		-	Variable speed 10% to 100%	Variable speed 10% to 100%
	Power input	Min.~Max.	W	17 ~ 152	17 ~ 152
		Rated	W	145	145
	Max. head		m	11	11
Heat exchanger (refrigerant to water)	Type		-	Brazed plate HEX	Brazed plate HEX
	No.		-	1	1
	Number of plate		EA	76	76
	Water volume		ℓ	1	1
Water strainer	Supply type		-	Loose supply (externally installed)	Loose supply (externally installed)
	Mesh size		mesh	30	30
	Max. particle size		mm	0.6	0.6
	Material		-	Stainless steel	Stainless steel
Safety valve (water cycle)	Pressure limit	Upper limit	bar	3.0	3.0
Flow sensor	Type		-	Vortex	Vortex
	Model(maker,name)		-	SIKA VVXC9SNBUC00252P	SIKA VVXC9SNBUC00252P
	Measuring range	Min. ~ Max.	ℓ /min	5 ~ 80	5 ~ 80
	Trigger point		ℓ /min	10	10
Water pressure sensor	Model (maker, name)		-	Sensata OFM(2HMP)	Sensata OFM(2HMP)
	Measuring range	Min. ~ Max.	bar	0 ~ 20	0 ~ 20
Sound pressure level	Heating(rated, @5m)		dB(A)	27	27
Sound power level	Heating	Low noise	dB(A)	48	48
		Rated	dB(A)	49	49
		Daytime max.	dB(A)	59	59
Water connecting pipes	Inlet		inch	Male PT 1" according to ISO 7-1 (tapered pipe threads)	
	Outlet		inch	Male PT 1" according to ISO 7-1 (tapered pipe threads)	
Dimensions	Net(W x H x D)		mm	1,560 x 1,019 x 520	1,560 x 1,019 x 520
	Shipping(W x H x D)		mm	1,620 x 1,200 x 574	1,620 x 1,200 x 574
Weight	Net		kg	181.0	181.0
	Shipping		kg	199.0	199.0
Exterior	Color of chassis		-	Dawn gray	Dawn gray
	RAL Code of chassis		-	RAL 7037	RAL 7037

Note

1. Due to our policy of innovation, some specifications may be changed without notification.
2. Wiring cable size must comply with the applicable local and national codes. And "Electric characteristics" chapter should be considered for electrical work and design. Especially the power cable and circuit breaker should be selected in accordance with that.
3. Sound power level is measured in accordance with EN 12102-1 and ISO 9614.
   - Rated : This mode is measured on the rated condition in the semi-anechoic rooms. Therefore, these values may vary depending on operation conditions.
   - Daytime max : This mode is measured based on max. fan RPM and max. compressor Hz. that can be reached under outdoor air temperature 2°C.
   - Low noise : This mode lowers noise by limiting the compressor Hz. and fan RPM, and thus the performance may be limited.
4. Performances are accordance with EN14511 and reflect ErP testing conditions. The values indicated above are the declared values at rated conditions acc. ErP regulation. For max. capacities, please refer to Performance Data.
5. This product contains Fluorinated greenhouse gases.
6. SCOP is in accordance with EN14825.
7. Rated running currents are based on the declared values under the following conditions.
   - Heating : Outdoor Temp. 7°CDB / 6°CWB, Leaving Water Temp. 35℃
   - Cooling : Outdoor Temp. 35°C(DB) / 24°C(WB), Leaving Water Temp. 18°C
8. All installation sites must be equipped with an earth leakage circuit breaker (ELCB).

* DHW 65~80°C Operating is available only when the booster heater is operating.

** In the case of integrated water pump, either water pump or water pump 2 will be applied.

This operation range includes not only the continuous operation range but also operative range.

1. Specifications

Performance specifications					FHBW148B0 [HM143HF UB60]	FHBW168B0 [HM163HF UB60]
-	-	Outdoor temp. (°CDB)	Leaving water temp. (°C)	-		
Capacity	Heating	7	35	kW	14.0	16.0
			55	kW	11.0	12.0
		2	35	kW	14.0	14.5
		-7	35	kW	13.0	13.8
			55	kW	10.3	10.9
	Cooling	35	18	kW	12.0	12.5
			7	kW	12.0	12.5
Power input	Heating	7	35	kW	3.11	3.72
			55	kW	3.38	3.63
		2	35	kW	3.88	4.15
		-7	35	kW	4.05	4.35
			55	kW	4.52	4.82
	Cooling	35	18	kW	3.24	3.38
			7	kW	4.01	4.24
COP	Heating	7	35	W/W	4.50	4.30
			55	W/W	3.25	3.30
		2	35	W/W	3.61	3.49
		-7	35	W/W	3.21	3.17
			55	W/W	2.28	2.26
EER	Cooling	35 / 24	18	W/W	3.70	3.70
			7	W/W	2.99	2.95
Seasonal space heating eff. class			35	-	A+++	A+++
			55	-	A+++	A+++
Seasonal space heating efficiency (η_S)			35	-	212	201
			55	-	155	154
SCOP(average climate)			35	W/W	5.38	5.11
			55	W/W	3.96	3.92
Water Heating Efficiency (profile L)				%	130	130
Water flow rate		Rated(at ΔT 5℃)		ℓ /min	40.3	46.0
Operation range (outdoor temperature)		Cooling#	Min.~Max.	°C(DB)	5~48	5~48
		Heating	Min.~Max.	°C(DB)	-28 ~ 35	-28 ~ 35

Electrical specifications			FHBW148B0 [HM143HF UB60]	FHBW168B0 [HM163HF UB60]
Power supply	Case 1	V, Ø, Hz	380-415, 3, 50	380-415, 3, 50
	Limit range of voltage	V	342~457	342~457
Running current	Heating(Rated)	A	4.49	5.37
	Cooling(Rated)	A	4.44	4.75
Peak control running current	Heating	A	9	10
	Cooling	A	9	10
Recommended circuit breaker(ELCB)		A	16	16
Standby power consumption		W	10	10
Connecting cable	Power supply cable (included Earth, H07RN-F)	mm² x cores	2.5 x 5C	2.5 x 5C
	Communication cable (H07RN-F)	mm² x cores	0.75 x 2C	0.75 x 2C

Technical specifications			FHBW148B0 [HM143HF UB60]	FHBW168B0 [HM163HF UB60]
Refrigerant	Type	-	R290	R290
	Precharged amount	kg	1.2	1.2
	GWP	-	3	3
	t-CO_2 eq.	-	0.0036	0.0036
	Control type	-	Electronic expansion valve	Electronic expansion valve
Compressor	Type	-	Hermetic motor compressor	Hermetic motor compressor
	Model x No.	-	PJQC062MAA x 1	PJQC062MAA x 1
	Piston displacement	cm³/rev	61.5	61.5
	Motor type	-	BLDC	BLDC
Refrigerant oil	Type	-	PZ68S	PZ68S
	Charged volume	cc x No.	1200	1200
Fan	Type	-	Propeller	Propeller
	Air flow rate (rated)	m³/min	110 x 1	110 x 1
Fan motor	Type	-	BLDC	BLDC
	Output	W x No.	250 x 1	250 x 1
Heat exchanger	Rows x columns x FPI	-	46 x 3 x 18	46 x 3 x 18
	No.	EA	1	1
	Fin type	-	Corrugate	Corrugate

1. Specifications

Technical specifications				FHBW148B0 [HM143HF UB60]	FHBW168B0 [HM163HF UB60]
Water pump**	Type		-	Canned type for hot water circulation	Canned type for hot water circulation
	Model (maker, name)		-	GRUNDFOS, UPML GEO 20-105 CHBL	GRUNDFOS, UPML GEO 20-105 CHBL
	Motor type		-	BLDC	BLDC
	Steps of pumping performance		-	Variable speed 10% to 100%	Variable speed 10% to 100%
	Power input	Min.~Max.	W	17~152	17~152
		Rated	W	145	145
	Max. head		m	11	11
Water pump 2**	Type		-	Canned type for hot water circulation	Canned type for hot water circulation
	Model (maker, name)		-	OH SUNG, ODM-061P	OH SUNG, ODM-061P
	Motor type		-	BLDC	BLDC
	Steps of pumping performance		-	Variable speed 10% to 100%	Variable speed 10% to 100%
	Power input	Min.~Max.	W	17 ~ 152	17 ~ 152
		Rated	W	145	145
	Max. head		m	11	11
Heat exchanger (refrigerant to water)	Type		-	Brazed plate HEX	Brazed plate HEX
	No.		-	1	1
	Number of plate		EA	76	76
	Water volume		ℓ	1	1
Water strainer	Supply type		-	Loose supply (externally installed)	Loose supply (externally installed)
	Mesh size		mesh	30	30
	Max. particle size		mm	0.6	0.6
	Material		-	Stainless steel	Stainless steel
Safety valve (water cycle)	Pressure limit	Upper limit	bar	3.0	3.0
Flow sensor	Type		-	Vortex	Vortex
	Model(maker,name)		-	SIKA VVXC9SNBUC00252P	SIKA VVXC9SNBUC00252P
	Measuring range	Min. ~ Max.	ℓ /min	5 ~ 80	5 ~ 80
	Trigger point		ℓ /min	10	10
Water pressure sensor	Model (maker, name)		-	Sensata OFM(2HMP)	Sensata OFM(2HMP)
	Measuring range	Min. ~ Max.	bar	0 ~ 20	0 ~ 20
Sound pressure level	Heating(rated, @5m)		dB(A)	29	30
Sound power level	Heating	Low noise	dB(A)	50	51
		Rated	dB(A)	51	52
		Daytime max.	dB(A)	60	61
Water connecting pipes	Inlet		inch	Male PT 1" according to ISO 7-1 (tapered pipe threads)	
	Outlet		inch	Male PT 1" according to ISO 7-1 (tapered pipe threads)	
Dimensions	Net(W x H x D)		mm	1,560 x 1,019 x 520	1,560 x 1,019 x 520
	Shipping(W x H x D)		mm	1,620 x 1,200 x 574	1,620 x 1,200 x 574
Weight	Net		kg	181.0	181.0
	Shipping		kg	199.0	199.0
Exterior	Color of chassis		-	Dawn gray	Dawn gray
	RAL Code of chassis		-	RAL 7037	RAL 7037

Note

1. Due to our policy of innovation, some specifications may be changed without notification.
2. Wiring cable size must comply with the applicable local and national codes. And "Electric characteristics" chapter should be considered for electrical work and design. Especially the power cable and circuit breaker should be selected in accordance with that.
3. Sound power level is measured in accordance with EN 12102-1 and ISO 9614.
   - Rated : This mode is measured on the rated condition in the semi-anechoic rooms. Therefore, these values may vary depending on operation conditions.
   - Daytime max : This mode is measured based on max. fan RPM and max. compressor Hz. that can be reached under outdoor air temperature 2°C.
   - Low noise : This mode lowers noise by limiting the compressor Hz. and fan RPM, and thus the performance may be limited.
4. Performances are accordance with EN14511 and reflect ErP testing conditions. The values indicated above are the declared values at rated conditions acc. ErP regulation. For max. capacities, please refer to Performance Data.
5. This product contains Fluorinated greenhouse gases.
6. SCOP is in accordance with EN14825.
7. Rated running currents are based on the declared values under the following conditions.
   - Heating : Outdoor Temp. 7°CDB / 6°CWB, Leaving Water Temp. 35℃
   - Cooling : Outdoor Temp. 35°C(DB) / 24°C(WB), Leaving Water Temp. 18°C
8. All installation sites must be equipped with an earth leakage circuit breaker (ELCB).

* DHW 65~80°C Operating is available only when the booster heater is operating.

** In the case of integrated water pump, either water pump or water pump 2 will be applied.

This operation range includes not only the continuous operation range but also operative range.

2. List of functions

Category	Functions	FHBW076B0 [HM071HF UB40] FHBW096B0 [HM091HF UB40] FHBW126B0 [HM121HF UB60] FHBW146B0 [HM141HF UB60] FHBW166B0 [HM161HF UB60]	FHBW078B0 [HM073HF UB40] FHBW098B0 [HM093HF UB40] FHBW098X0 [HM093HFX UB60] FHBW128B0 [HM123HF UB60] FHBW148B0 [HM143HF UB60] FHBW168B0 [HM163HF UB60]
Reliability	Defrost / Deicing	O	O
	High pressure switch	O	O
	Low pressure switch	X	X
	Phase protection	X	O
	Restart delay (3-minutes)	O	O
	Self diagnosis	O	O
	Soft start	X	X
Convenience	Test function	X	X
	Low Noise Operation	O	O
	Wiring Error Check	X	X
	Peak Control	O	O
	Mode Lock	O	O
	Forced Cooling Operation (Outdoor Unit)	X	X
	Base Pan Heater	O	O
	SLC(Smart Load Control)	X	X
Network function	Network solution(LGAP)	O	O

Note
1. O : Applied, X : Not applied

3. Accessory Compatibility List

Category		Product	Remark	FHBW076B0 [HM071HF UB40] FHBW096B0 [HM091HF UB40] FHBW078B0 [HM073HF UB40] FHBW098B0 [HM093HF UB40]	FHBW126B0 [HM121HF UB60] FHBW146B0 [HM141HF UB60] FHBW166B0 [HM161HF UB60] FHBW098X0 [HM093HFX UB60] FHBW128B0 [HM123HF UB60] FHBW148B0 [HM143HF UB60] FHBW168B0 [HM163HF UB60]
Central Controller	AC EZ	PQCSZ250S0	AC EZ	X	X
	AC Ez Touch	PACEZA000	AC Ez Touch	X	X
	AC Smart	PACS5A000	AC Smart 5	X	X
	ACP	PACP5A000	ACP 5	X	X
	AC Manager **	PACM5A000	AC Manager 5	X	X
Gateway	IDU PI485	PHNFP14A0	Without case	X	X
		PSNFP14A0	With case	X	X
	ODU PI485	PP485A00T	PI 485 Gateway	X	X
		PMNFP14A1	PI 485 Gateway (Produced before 1st of Sep. of 2021)	X	X
	BACnet	PQNFB17C0	ACP BACnet	X	X
	Lonworks	PLNWKB000	ACP Lonworks	X	X
	Modbus	PMBUSB00A	-	O	O
	Cloud Gateway	PWFMDB200	Cloud (ThinQ, BECON)	O	O
ETC	PDI	PPWRDB000	PDI Standard	X	X
		PQNUD1S40	PDI Premium	X	X
	ACS IO Module	PEXPMB000	-	X	X
	Downward piping	PHDW36B0	Downward piping kit	O	X
		PHDW60B0	Downward piping kit	X	O

Note
1. O: Possible, X: Impossible, - : Not applicable
2. ** : ACP or AC Smart is needed.
3. If you need more detail, please refer to the manual of product.
   (http://partner.lge.com > Select Your Region : Home> Doc.Library> Product > Control(BECON))
4. When used in Cascade, Cloud Gateway is connected to Cascade control unit not the outdoor unit.

4. Dimensions

■ FHBW076B0 [HM071HF UB40] / FHBW078B0 [HM073HF UB40] FHBW096B0 [HM091HF UB40] / FHBW098B0 [HM093HF UB40]

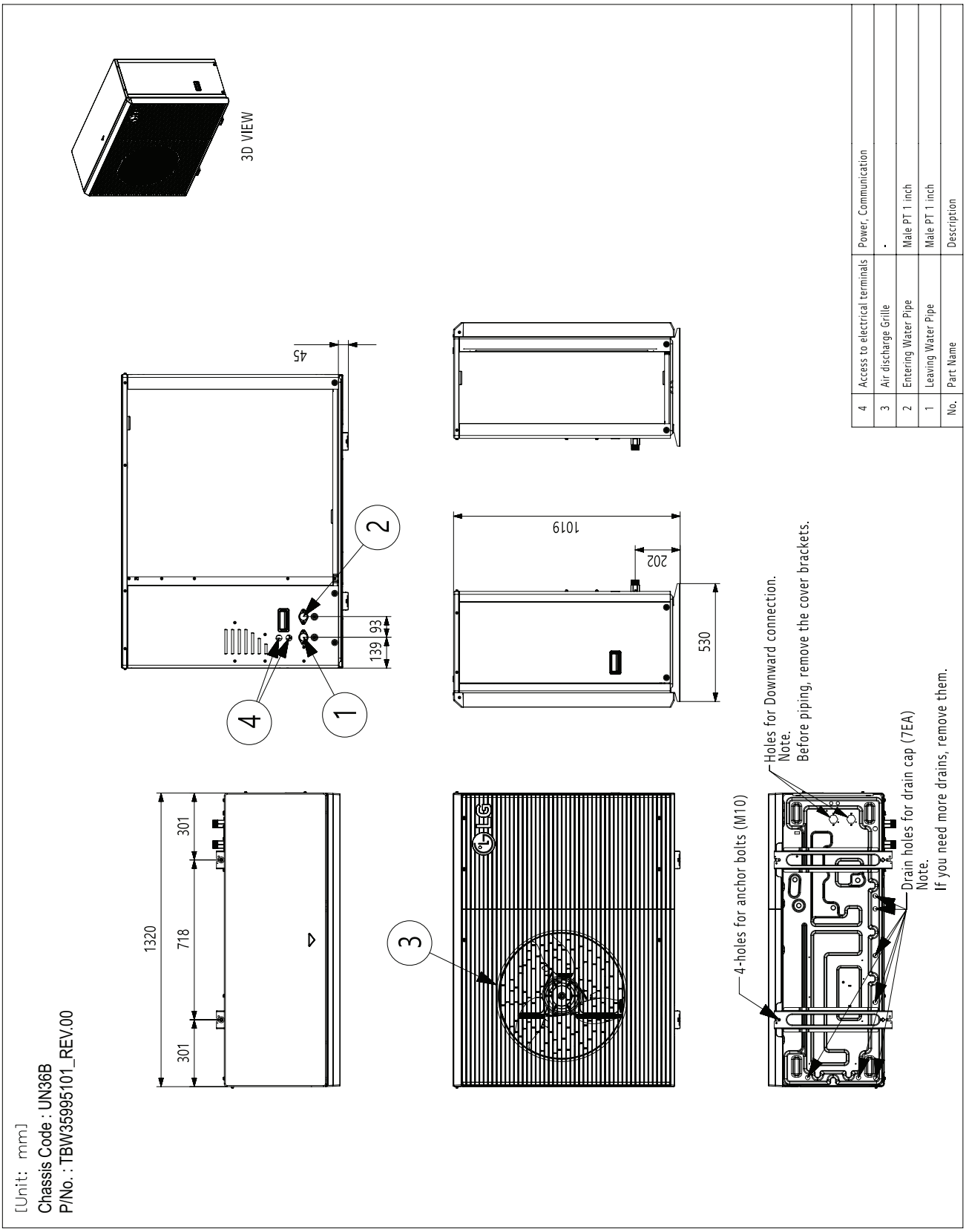

No.	Part Name	Description
4	Access to electrical terminals	Power, Communication
3	Air discharge Grille	-
2	Entering Water Pipe	Male PT 1 inch
1	Leaving Water Pipe	Male PT 1 inch

4. Dimensions

■ FHBW126B0 [HM121HF UB60] / FHBW146B0 [HM141HF UB60] FHBW166B0 [HM161HF UB60] / FHBW098X0 [HM093HFX UB60] FHBW128B0 [HM123HF UB60] / FHBW148B0 [HM143HF UB60] FHBW168B0 [HM163HF UB60]

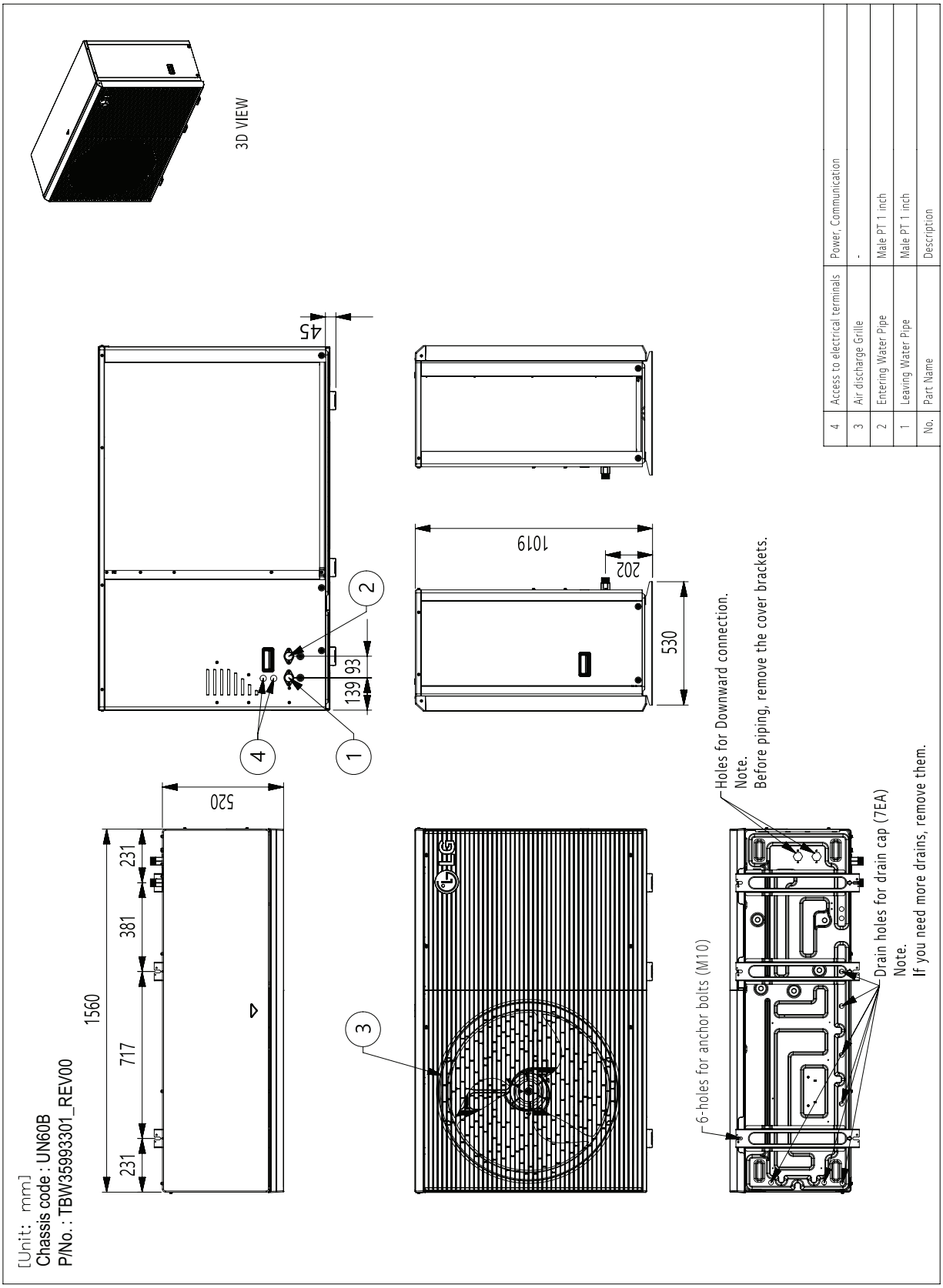

No.	Part Name	Description
4	Access to electrical terminals	Power, Communication
3	Air discharge Grille	-
2	Entering Water Pipe	Male PT 1 inch
1	Leaving Water Pipe	Male PT 1 inch

5. Wiring Diagram

■ FHBW076B0 [HM071HF UB40] / FHBW096B0 [HM091HF UB40]

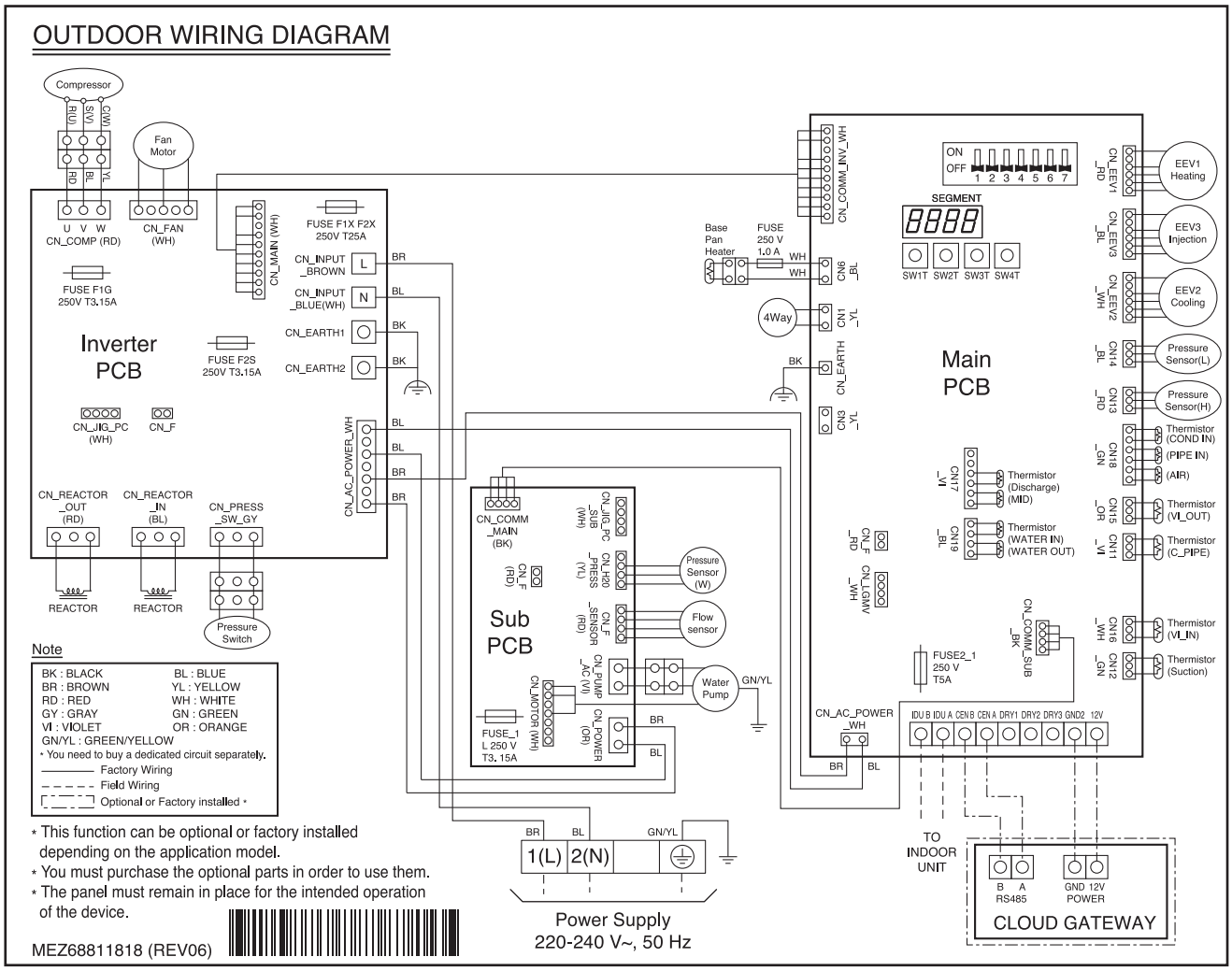

5. Wiring Diagram

■ FHBW078B0 [HM073HF UB40] / FHBW098B0 [HM093HF UB40]

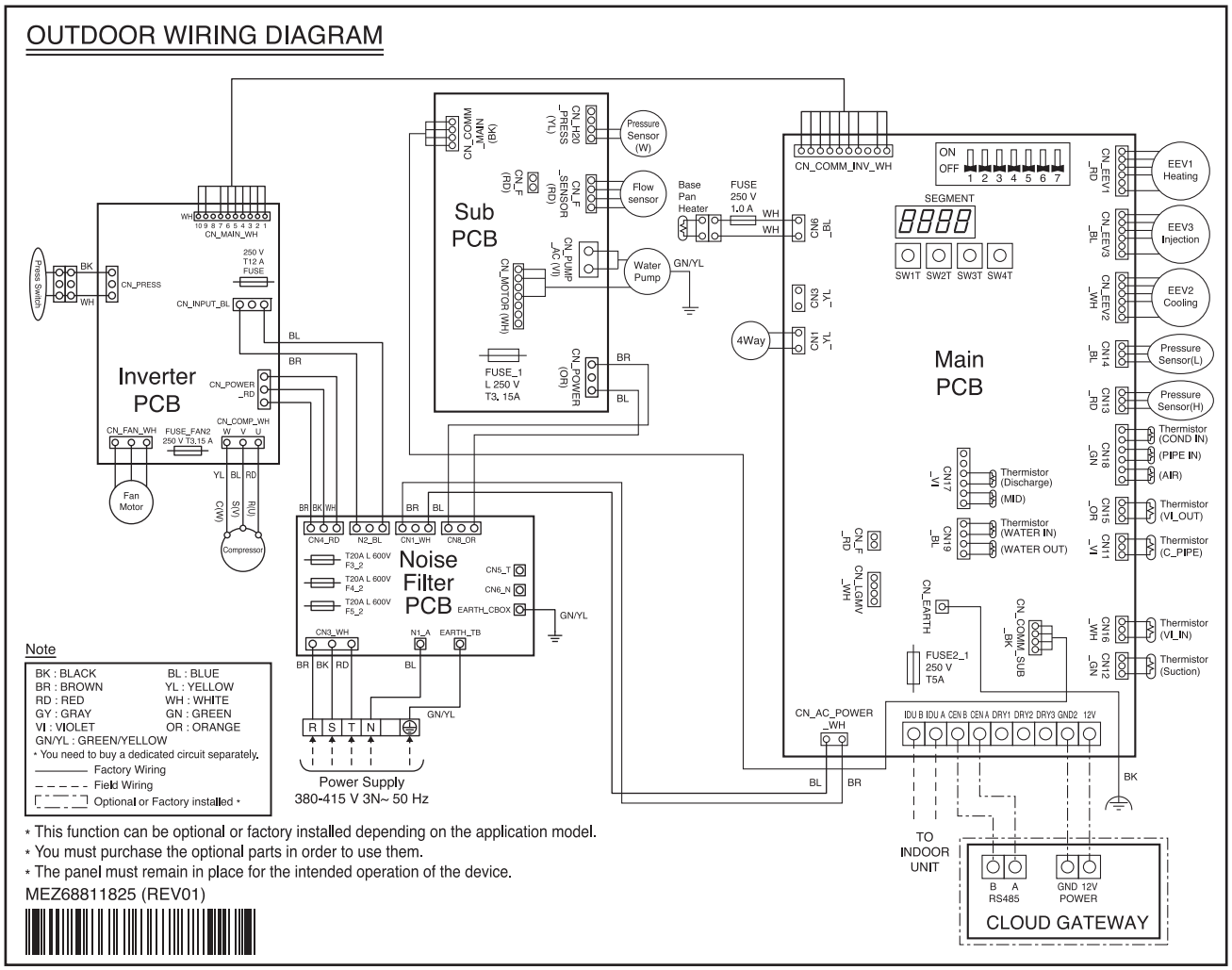

5. Wiring Diagram

■ FHBW126B0 [HM121HF UB60] / FHBW146B0 [HM141HF UB60] FHBW166B0 [HM161HF UB60]

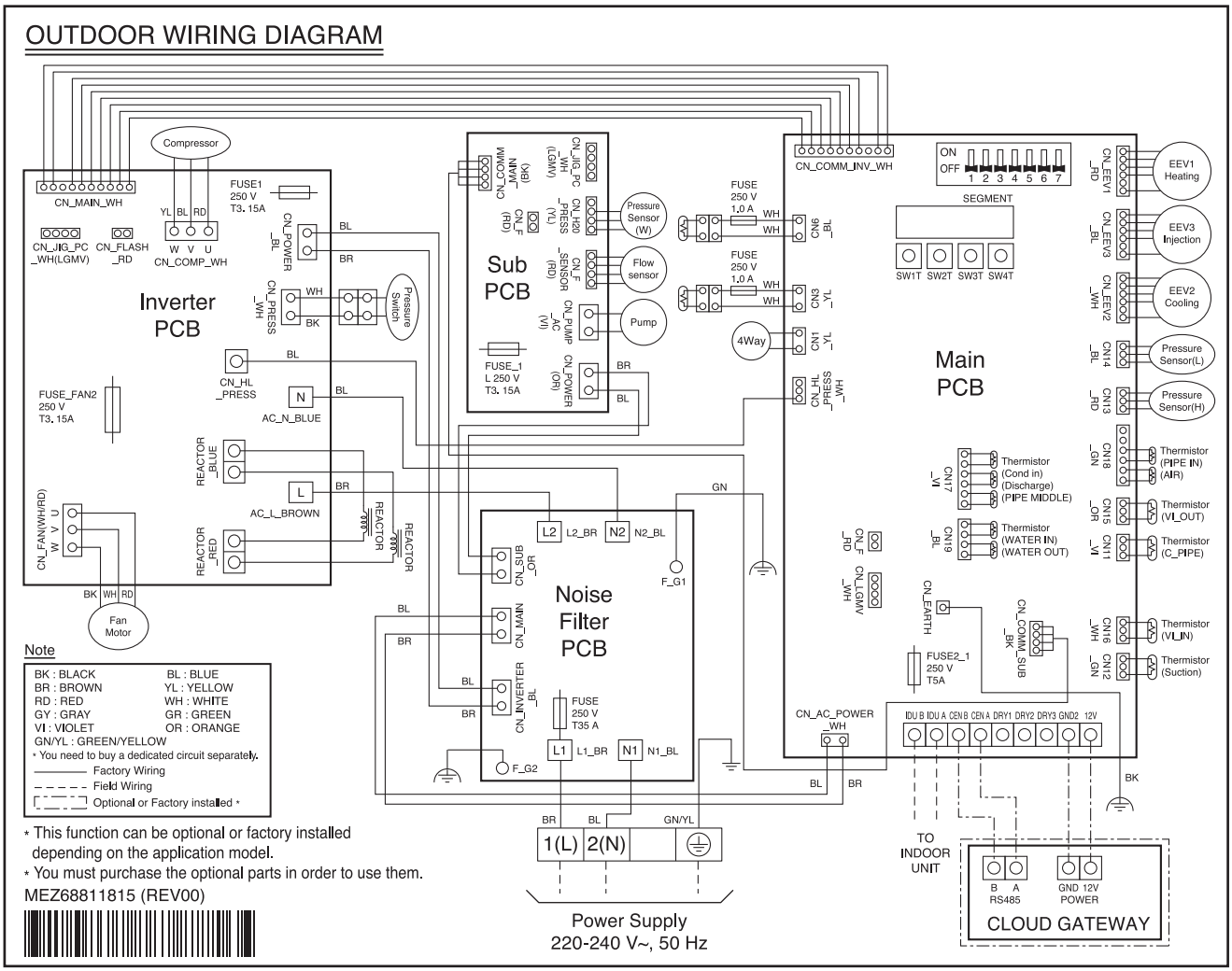

5. Wiring Diagram

■ FHBW098X0 [HM093HFX UB60] / FHBW128B0 [HM123HF UB60] FHBW148B0 [HM143HF UB60] / FHBW168B0 [HM163HF UB60]

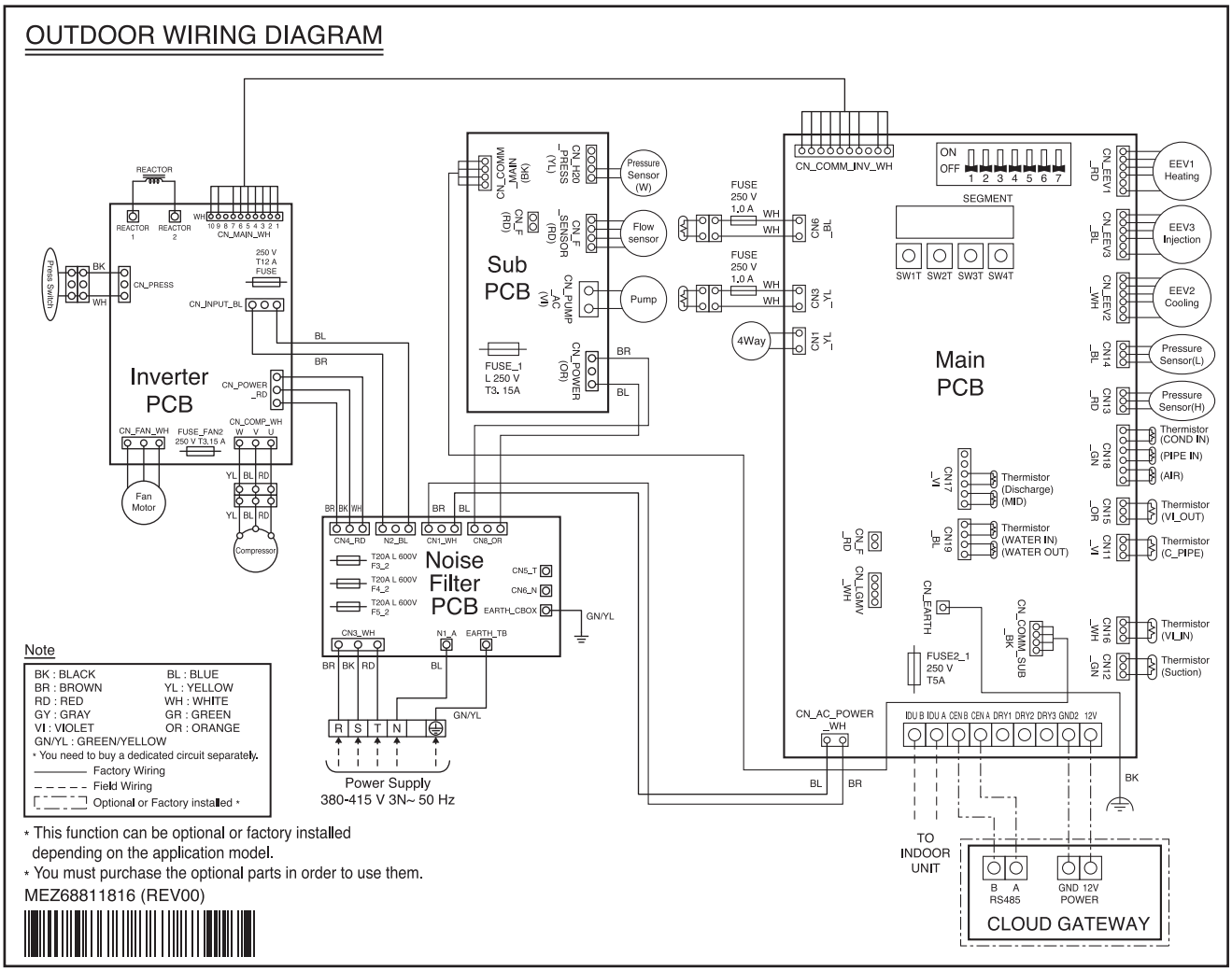

5. Wiring Diagram

■ Field Wiring

◆ For Hydro Unit type

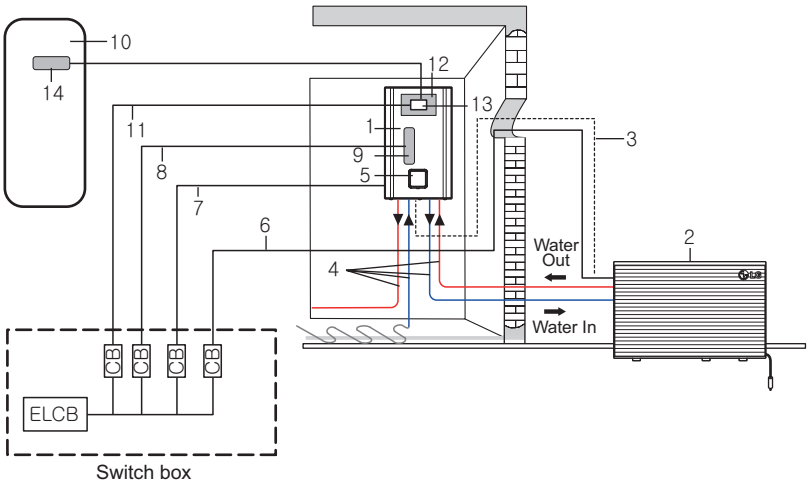

No.	Name	No.	Name
1	Hydro unit	10	DHW tank *
2	Outdoor unit	11	Power supply DHW boost heater *
3	Communication cable	12	DHW tank kit *
4	Heating water pipes	13	Circuit breaker for DHW boost heater *
5	Remote controller	14	DHW boost heater *
6	Power supply outdoor unit	* Optional ELCB : Earth-leakage circuit breaker CB : Circuit breaker	
7	Power supply indoor unit		
8	Power supply backup heater *		
9	Backup heater *		

Note

1. Voltage supplied to the unit terminals should be within the minimum and maximum range.
2. Maximum allowable voltage unbalance between phase is 2%.
3. All installation sites must be equipped with an earth leakage circuit breaker (ELCB).

5. Wiring Diagram

◆ For Control Unit type

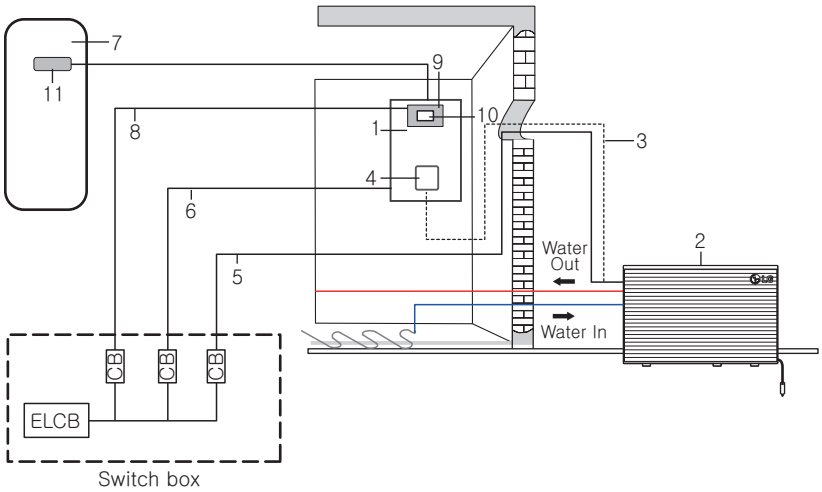

No.	Name	No.	Name
1	Control unit	8	Power supply DHW boost heater *
2	Outdoor unit	9	DHW tank kit * (PHLTA/PHLTC)
3	Communication cable	10	Circuit breaker for DHW boost heater *
4	Remote controller	11	DHW boost heater *
5	Power supply outdoor unit	* Optional ELCB : Earth-leakage circuit breaker CB : Circuit breaker	
6	Power supply indoor unit		
7	DHW tank *		

Note

1. Voltage supplied to the unit terminals should be within the minimum and maximum range.
2. Maximum allowable voltage unbalance between phase is 2%.
3. All installation sites must be equipped with an earth leakage circuit breaker (ELCB).

5. Wiring Diagram

◆ For Cascade Control Unit type

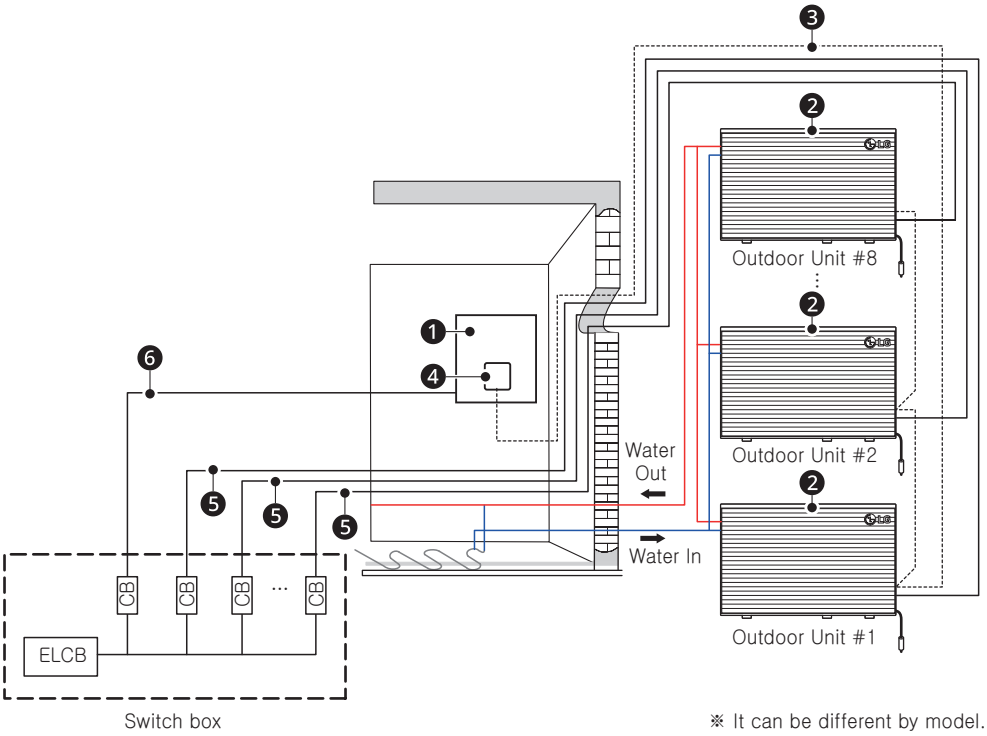

No.	Name	No.	Name
1	Cascade Control unit	6	Power supply indoor unit
2	Outdoor unit	* Optional ELCB : Earth-leakage circuit breaker CB : Circuit breaker	
3	Communication cable		
4	Remote controller		
5	Power supply outdoor unit		

Note

1. Voltage supplied to the unit terminals should be within the minimum and maximum range.
2. Maximum allowable voltage unbalance between phase is 2%.
3. All installation sites must be equipped with an earth leakage circuit breaker (ELCB).

5. Wiring Diagram

◆ For Combi Unit type

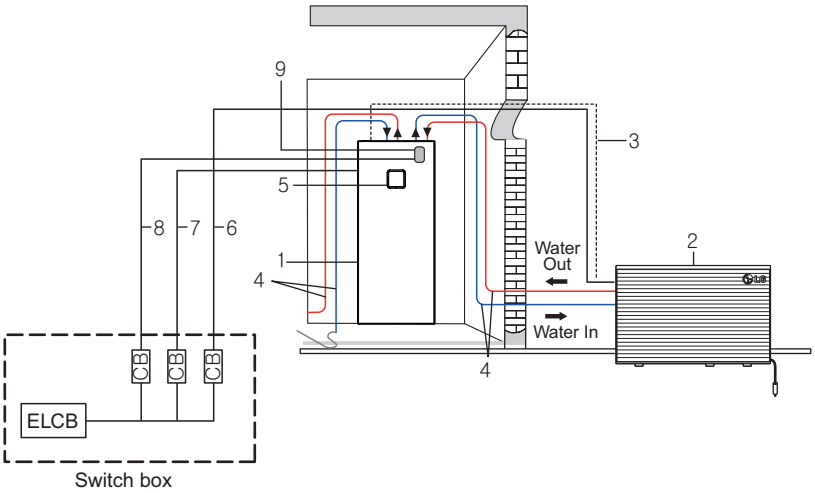

No.	Name	No.	Name
1	Combi Unit	7	Power supply indoor unit
2	Outdoor unit	8	Power supply backup heater
3	Communication cable	9	Backup heater
4	Heating water pipes	* Optional ELCB : Earth-leakage circuit breaker CB : Circuit breaker	
5	Remote controller		
6	Power supply outdoor unit		

Note

1. Voltage supplied to the unit terminals should be within the minimum and maximum range.
2. Maximum allowable voltage unbalance between phase is 2%.
3. All installation sites must be equipped with an earth leakage circuit breaker (ELCB).

6. Piping Diagram

■ FHBW076B0 [HM071HF UB40] / FHBW078B0 [HM073HF UB40] FHBW096B0 [HM091HF UB40] / FHBW098B0 [HM093HF UB40]

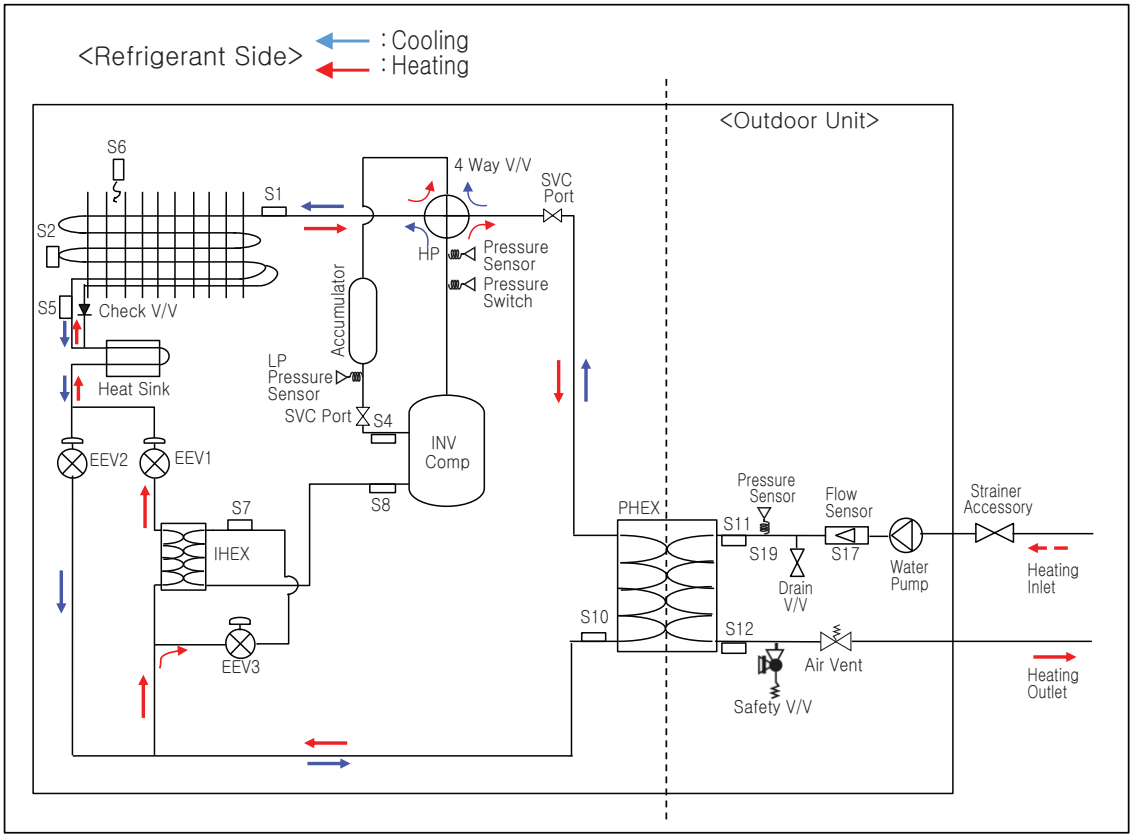

Category	Symbol	Meaning
Refrigerant side	S1	Outdoor-HEX gas temp. sensor
	S2	Outdoor-HEX middle temp. sensor
	S3	Compressor discharge temp. sensor
	S4	Compressor suction pipe temp. sensor
	S5	Outdoor-HEX temp. sensor
	S6	Outdoor air temp. sensor
	S7	Compressor-injection pipe IN temp. sensor
	S8	Compressor-injection pipe OUT temp. sensor
	S10	PHEX liquid temp. sensor
	LP	Low pressure sensor
	HP	High pressure sensor
Water side	S11	Inlet water temp. sensor
	S12	Outlet water temp. sensor
	S17	Flow sensor
	S19	Water pressure sensor

6. Piping Diagram

■ FHBW126B0 [HM121HF UB60] / FHBW146B0 [HM141HF UB60] FHBW166B0 [HM161HF UB60] / FHBW098X0 [HM093HFX UB60] FHBW128B0 [HM123HF UB60] / FHBW148B0 [HM143HF UB60] FHBW168B0 [HM163HF UB60]

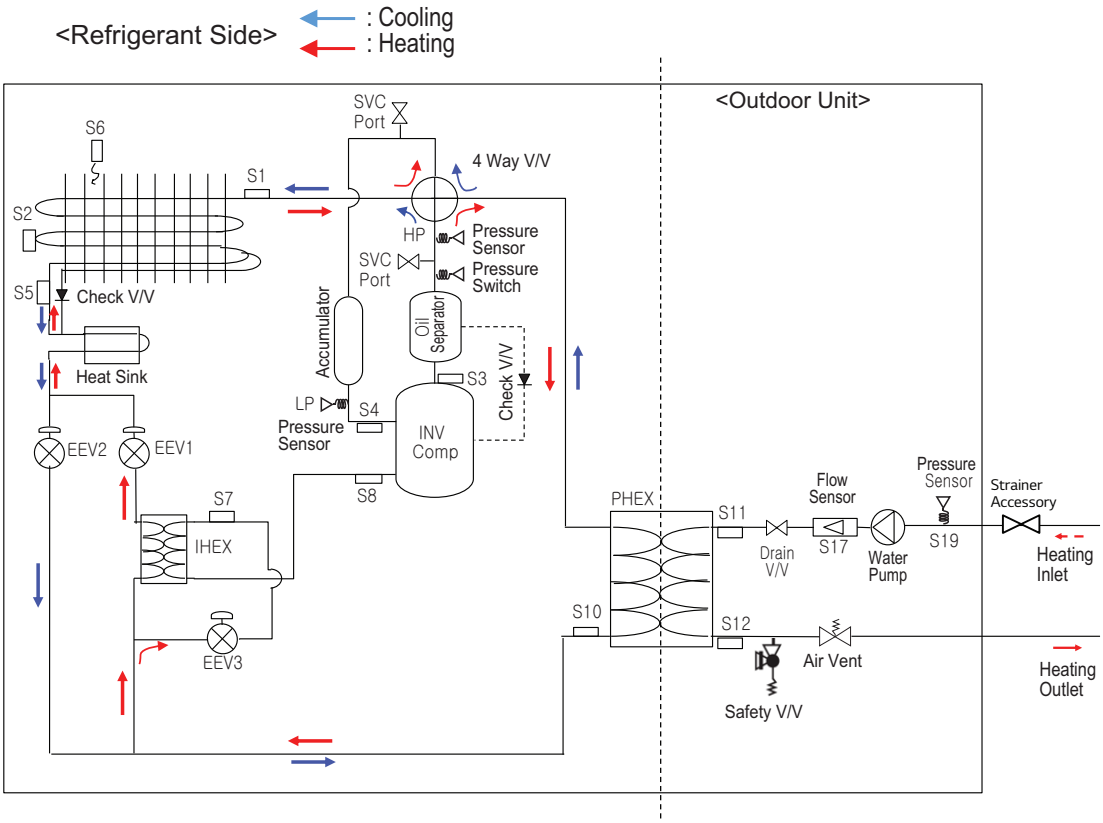

Category	Symbol	Meaning
Refrigerant side	S1	Outdoor-HEX gas temp. sensor
	S2	Outdoor-HEX middle temp. sensor
	S3	Compressor discharge temp. sensor
	S4	Compressor suction pipe temp. sensor
	S5	Outdoor-HEX temp. sensor
	S6	Outdoor air temp. sensor
	S7	Compressor-injection pipe IN temp. sensor
	S8	Compressor-injection pipe OUT temp. sensor
	S10	PHEX liquid temp. sensor
	LP	Low pressure sensor
	HP	High pressure sensor
Water side	S11	Inlet water temp. sensor
	S12	Outlet water temp. sensor
	S17	Flow sensor
	S19	Water pressure sensor

7. Capacity Tables

7.1 Heating Operation

■ Maximum Capacity (Include defrost effect)

◆ FHBW076B0 [HM071HF UB40], FHBW078B0 [HM073HF UB40]

Outdoor Temp. [°C DB]	Water flow rate 20.1 LPM								Water flow rate 12.6 LPM				Water flow rate 10.1 LPM							
	LWT 30 °C		LWT 35 °C		LWT 40 °C		LWT 45 °C		LWT 50 °C		LWT 55 °C		LWT 60°C		LWT 65 °C		LWT 70°C		LWT 75 °C	
	TC	COP	TC	COP	TC	COP	TC	COP	TC	COP	TC	COP	TC	COP	TC	COP	TC	COP	TC	COP
-25	5.90	2.43	5.85	2.27	5.85	2.13	5.85	1.99	5.80	1.86	5.80	1.75	5.80	1.68						
-20	6.50	2.83	6.50	2.60	6.50	2.41	6.50	2.24	6.20	2.09	6.10	1.95	6.10	1.80	6.00	1.64				
-15	7.00	3.21	7.00	2.90	7.00	2.67	7.00	2.48	6.80	2.31	6.70	2.18	6.30	2.04	6.30	1.90	6.20	1.75	6.20	1.60
-7	7.00	3.79	7.00	2.80	7.00	3.06	7.00	2.65	7.00	2.69	7.00	2.40	7.00	2.31	6.70	2.27	6.60	2.11	6.40	1.95
-4	7.00	4.07	7.00	3.53	7.00	3.31	7.00	3.08	7.00	2.90	7.00	2.68	7.00	2.58	7.00	2.42	6.70	2.25	6.50	2.08
-2	7.00	4.26	7.00	3.75	7.00	3.49	7.00	3.27	7.00	3.05	7.00	2.82	7.00	2.70	7.00	2.52	6.80	2.34	6.50	2.16
2	7.00	4.20	7.00	3.80	7.00	3.50	7.00	3.30	7.00	3.15	7.00	3.10	7.00	2.51	7.00	2.39	7.00	2.22	6.70	2.05
7	7.00	5.22	7.00	5.00	7.00	4.42	7.00	4.20	7.00	3.77	7.00	3.46	7.00	3.17	7.00	2.88	7.00	2.75	6.80	2.55
10	7.00	5.52	7.00	5.11	7.00	4.69	7.00	4.34	7.00	3.98	7.00	3.65	7.00	3.35	7.00	3.06	7.00	2.90	7.00	2.68
15	7.00	5.96	7.00	5.49	7.00	5.06	7.00	4.67	7.00	4.31	7.00	3.97	7.00	3.65	7.00	3.34	7.00	3.15	7.00	2.89
18	7.00	6.20	7.00	5.71	7.00	5.27	7.00	4.87	7.00	4.50	7.00	4.15	7.00	3.82	7.00	3.51	7.00	3.29	7.00	3.01
20	7.00	6.35	7.00	5.85	7.00	5.40	7.00	4.99	7.00	4.62	7.00	4.26	7.00	3.93	7.00	3.61	7.00	3.38	7.00	3.10
35					7.00	6.10	7.00	5.76	7.00	5.42	7.00	5.08	7.00	4.74	7.00	4.40	7.00	4.06	7.00	3.72

Note

1. DB : Dry bulb temperature(℃), LWT : Leaving water temperature(℃), LPM : Liter per minute (ℓ /min)
2. TC : Total capacity(kW), EER: Energy efficiency ratio(kW/kW), COP : Coefficient of performance (kW/kW)
3. Direct interpolation is permissible. Do not extrapolate.
4. Measuring procedure follows EN14511.
   - Rated values are based on standard conditions, and it can be found on specifications.
   - Above table values may not be matched according to installation condition. Except for rated value, the performance is not guaranteed.
   - In accordance with the test standard(or nations), the results may vary.
5. The Shaded areas are not guaranteed continuous operation.
6. When used in Cascade, the desired temperature is up to 70℃ and the maximum leaving water temperature of 70℃ can be used in the capacity table.

7. Capacity Tables

◆ FHBW096B0 [HM091HF UB40]

Outdoor Temp. [°C DB]	Water flow rate 25.9 LPM								Water flow rate 16.2 LPM				Water flow rate 12.9 LPM							
	LWT 30 °C		LWT 35 °C		LWT 40 °C		LWT 45 °C		LWT 50 °C		LWT 55 °C		LWT 60°C		LWT 65 °C		LWT 70°C		LWT 75 °C	
	TC	COP	TC	COP	TC	COP	TC	COP	TC	COP	TC	COP	TC	COP	TC	COP	TC	COP	TC	COP
-25	7.40	2.09	7.20	1.99	7.10	1.90	6.90	1.83	6.80	1.75	6.70	1.68	6.60	1.62						
-20	8.20	2.38	7.90	2.25	7.70	2.13	7.50	2.03	7.30	1.93	7.10	1.83	6.90	1.71	6.60	1.56				
-15	9.00	2.65	9.00	2.46	8.20	2.35	7.90	2.23	7.70	2.12	7.60	2.00	7.30	1.89	7.00	1.77	6.80	1.65	6.50	1.50
-7	9.00	3.31	9.00	2.70	9.00	2.60	8.50	2.45	8.40	2.44	8.00	2.20	7.90	2.19	7.70	2.10	7.40	1.99	6.60	1.84
-4	9.00	3.63	9.00	3.23	9.00	2.99	9.00	2.79	9.00	2.61	8.40	2.42	8.20	2.32	7.90	2.23	7.70	2.13	6.70	1.97
-2	9.00	3.86	9.00	3.46	9.00	3.19	9.00	2.96	9.00	2.73	9.00	2.50	8.40	2.41	8.10	2.32	7.60	2.20	6.80	2.05
2	8.00	3.90	8.00	3.70	8.10	3.27	8.20	3.00	8.30	2.72	8.40	2.35	8.20	2.28	8.10	2.18	7.80	2.03	6.90	1.84
7	9.00	4.92	9.00	4.70	9.00	4.12	9.00	3.70	9.00	3.43	9.00	3.15	9.00	2.96	9.00	2.80	8.20	2.62	7.10	2.44
10	9.00	5.26	9.00	4.85	9.00	4.41	9.00	4.02	9.00	3.69	9.00	3.40	9.00	3.18	9.00	2.97	8.20	2.78	7.20	2.58
15	9.00	5.78	9.00	5.29	9.00	4.85	9.00	4.45	9.00	4.10	9.00	3.79	9.00	3.52	9.00	3.27	8.30	3.03	7.30	2.80
18	9.00	6.07	9.00	5.55	9.00	5.09	9.00	4.68	9.00	4.32	9.00	4.00	9.00	3.71	9.00	3.44	8.40	3.18	7.40	2.93
20	9.00	6.24	9.00	5.71	9.00	5.24	9.00	4.83	9.00	4.46	9.00	4.14	9.00	3.84	9.00	3.55	8.40	3.28	7.50	3.02
35					9.00	6.05	9.00	5.71	9.00	5.38	9.00	5.04	9.00	4.71	9.00	4.37	9.00	4.04	8.00	3.70

Note

1. DB : Dry bulb temperature(℃), LWT : Leaving water temperature(℃), LPM : Liter per minute (ℓ /min)
2. TC : Total capacity(kW), EER: Energy efficiency ratio(kW/kW), COP : Coefficient of performance (kW/kW)
3. Direct interpolation is permissible. Do not extrapolate.
4. Measuring procedure follows EN14511.
   - Rated values are based on standard conditions, and it can be found on specifications.
   - Above table values may not be matched according to installation condition. Except for rated value, the performance is not guaranteed.
   - In accordance with the test standard(or nations), the results may vary.
5. The Shaded areas are not guaranteed continuous operation.
6. When used in Cascade, the desired temperature is up to 70℃ and the maximum leaving water temperature of 70℃ can be used in the capacity table.

7. Capacity Tables

◆ FHBW098B0 [HM093HF UB40]

Outdoor Temp. [°C DB]	Water flow rate 25.9 LPM								Water flow rate 16.2 LPM				Water flow rate 12.9 LPM							
	LWT 30 °C		LWT 35 °C		LWT 40 °C		LWT 45 °C		LWT 50 °C		LWT 55 °C		LWT 60°C		LWT 65 °C		LWT 70°C		LWT 75 °C	
	TC	COP	TC	COP	TC	COP	TC	COP	TC	COP	TC	COP	TC	COP	TC	COP	TC	COP	TC	COP
-25	7.90	2.14	7.77	1.99	7.92	1.90	8.08	1.82	8.20	1.74	8.40	1.66	8.40	1.56						
-20	9.00	2.38	9.00	2.25	9.00	2.13	9.00	1.98	9.00	1.92	9.00	1.81	9.00	1.68	9.00	1.53				
-15	9.00	2.65	9.00	2.46	9.00	2.35	9.00	2.22	9.00	2.10	9.00	2.00	9.00	1.86	9.00	1.75	9.00	1.62	9.00	1.50
-7	9.00	3.31	9.00	2.70	9.00	2.60	9.00	2.45	9.00	2.40	9.00	2.29	9.00	2.16	9.00	2.02	9.00	1.94	9.00	1.75
-4	9.00	3.63	9.00	3.23	9.00	2.99	9.00	2.79	9.00	2.61	9.00	2.45	9.00	2.29	9.00	2.13	9.00	2.07	9.00	1.84
-2	9.00	3.86	9.00	3.46	9.00	3.19	9.00	2.96	9.00	2.73	9.00	2.50	9.00	2.38	9.00	2.24	9.00	2.11	9.00	1.90
2	8.00	3.90	8.00	3.70	8.10	3.27	8.20	3.00	8.30	2.72	8.40	2.35	8.20	2.28	8.10	2.18	8.00	1.99	7.00	1.75
7	9.00	4.92	9.00	4.70	9.00	4.12	9.00	3.70	9.00	3.43	9.00	3.15	9.00	2.96	9.00	2.80	9.00	2.45	9.00	2.18
10	9.00	5.26	9.00	4.85	9.00	4.41	9.00	4.02	9.00	3.69	9.00	3.40	9.00	3.18	9.00	2.97	9.00	2.56	9.00	2.27
15	9.00	5.78	9.00	5.29	9.00	4.85	9.00	4.45	9.00	4.10	9.00	3.79	9.00	3.52	9.00	3.27	9.00	2.74	9.00	2.42
18	9.00	6.07	9.00	5.55	9.00	5.09	9.00	4.68	9.00	4.32	9.00	4.00	9.00	3.71	9.00	3.44	9.00	2.82	9.00	2.51
20	9.00	6.24	9.00	5.71	9.00	5.24	9.00	4.83	9.00	4.46	9.00	4.14	9.00	3.84	9.00	3.55	9.00	2.76	9.00	2.58
35					9.00	6.05	9.00	5.71	9.00	5.38	9.00	5.04	9.00	4.71	9.00	4.37	9.00	4.04	8.00	3.70

Note

1. DB : Dry bulb temperature(℃), LWT : Leaving water temperature(℃), LPM : Liter per minute (ℓ /min)
2. TC : Total capacity(kW), EER: Energy efficiency ratio(kW/kW), COP : Coefficient of performance (kW/kW)
3. Direct interpolation is permissible. Do not extrapolate.
4. Measuring procedure follows EN14511.
   - Rated values are based on standard conditions, and it can be found on specifications.
   - Above table values may not be matched according to installation condition. Except for rated value, the performance is not guaranteed.
   - In accordance with the test standard(or nations), the results may vary.
5. The Shaded areas are not guaranteed continuous operation.
6. When used in Cascade, the desired temperature is up to 70℃ and the maximum leaving water temperature of 70℃ can be used in the capacity table.

7. Capacity Tables

◆ FHBW098X0 [HM093HFX UB60]

Outdoor Temp. [°C DB]	Water flow rate 25.9 LPM								Water flow rate 16.2 LPM				Water flow rate 12.9 LPM							
	LWT 30 °C		LWT 35 °C		LWT 40 °C		LWT 45 °C		LWT 50 °C		LWT 55 °C		LWT 60°C		LWT 65 °C		LWT 70°C		LWT 75 °C	
	TC	COP	TC	COP	TC	COP	TC	COP	TC	COP	TC	COP	TC	COP	TC	COP	TC	COP	TC	COP
-25	7.84	2.45	7.56	2.25	7.30	2.04	7.07	1.84	6.86	1.62	6.37	1.33								
-20	9.00	2.79	8.80	2.56	8.63	2.36	8.52	2.15	8.51	1.94	8.27	1.70	6.77	1.42						
-15	9.00	3.17	9.00	2.95	9.00	2.72	9.00	2.50	9.00	2.33	9.00	2.21	8.71	1.78	7.17	1.49				
-7	9.00	3.78	9.00	3.44	9.00	3.22	9.00	3.02	9.00	2.80	9.00	2.60	9.00	2.29	9.00	2.01	8.99	1.78		
-4	9.00	4.00	9.00	3.64	9.00	3.43	9.00	3.19	9.00	2.98	9.00	2.74	9.00	2.47	9.00	2.21	9.00	1.94	8.91	1.77
-2	9.00	4.16	9.00	3.79	9.00	3.56	9.00	3.33	9.00	3.08	9.00	2.84	9.00	2.58	9.00	2.33	9.00	2.07	9.00	1.85
2	9.00	4.82	9.00	3.88	9.00	3.94	9.00	3.67	9.00	3.40	9.00	3.09	9.00	2.72	8.08	1.68	6.84	1.44	6.36	1.34
7	9.00	5.56	9.00	4.90	9.00	4.47	9.00	4.15	9.00	3.80	9.00	3.52	9.00	2.99	9.00	2.13	8.03	1.74	7.67	1.60
10	9.00	6.00	9.00	5.19	9.00	4.81	9.00	4.44	9.00	4.05	9.00	3.64	9.00	3.13	9.00	2.35	9.00	2.05	8.95	1.82
15	9.00	6.59	9.00	5.90	9.00	5.39	9.00	4.92	9.00	4.46	9.00	3.98	9.00	3.51	9.00	2.67	9.00	2.49	9.00	2.25
18	9.00	6.94	9.00	6.28	9.00	5.73	9.00	5.22	9.00	4.71	9.00	4.15	9.00	3.74	9.00	2.90	9.00	2.66	9.00	2.37
20	9.00	7.17	9.00	6.54	9.00	5.95	9.00	5.42	9.00	4.89	9.00	4.36	9.00	3.88	9.00	3.05	9.00	2.78	9.00	2.46
35					9.00	7.66	9.00	6.71	9.00	6.11	9.00	5.51	9.00	4.92	9.00	4.32	9.00	3.63	9.00	3.06

Note

1. DB : Dry bulb temperature(℃), LWT : Leaving water temperature(℃), LPM : Liter per minute (ℓ /min)
2. TC : Total capacity(kW), EER: Energy efficiency ratio(kW/kW), COP : Coefficient of performance (kW/kW)
3. Direct interpolation is permissible. Do not extrapolate.
4. Measuring procedure follows EN14511.
   - Rated values are based on standard conditions, and it can be found on specifications.
   - Above table values may not be matched according to installation condition. Except for rated value, the performance is not guaranteed.
   - In accordance with the test standard(or nations), the results may vary.
5. The Shaded areas are not guaranteed continuous operation.
6. When used in Cascade, the desired temperature is up to 70℃ and the maximum leaving water temperature of 70℃ can be used in the capacity table.

7. Capacity Tables

◆ FHBW126B0 [HM121HF UB60], FHBW128B0 [HM123HF UB60]

Outdoor Temp. [°C DB]	Water flow rate 34.5 LPM								Water flow rate 21.6 LPM				Water flow rate 17.3 LPM							
	LWT 30 °C		LWT 35 °C		LWT 40 °C		LWT 45 °C		LWT 50 °C		LWT 55 °C		LWT 60°C		LWT 65 °C		LWT 70°C		LWT 75 °C	
	TC	COP	TC	COP	TC	COP	TC	COP	TC	COP	TC	COP	TC	COP	TC	COP	TC	COP	TC	COP
-25	8.36	2.42	8.07	2.23	7.79	2.02	7.54	1.82	7.32	1.60	6.37	1.33								
-20	9.60	2.76	9.39	2.53	9.20	2.33	9.09	2.13	9.08	1.92	8.27	1.70	6.77	1.42						
-15	10.84	3.09	10.69	2.88	10.55	2.66	10.55	2.44	10.84	2.27	10.76	2.14	8.71	1.78	7.17	1.49				
-7	12.00	3.62	12.00	3.30	12.00	3.08	12.00	2.88	12.00	2.66	12.00	2.48	11.27	2.19	10.00	1.97	8.99	1.78		
-4	12.00	3.84	12.00	3.49	12.00	3.29	12.00	3.05	12.00	2.84	12.00	2.60	12.00	2.35	10.88	2.13	9.65	1.91	8.91	1.77
-2	12.00	3.98	12.00	3.63	12.00	3.41	12.00	3.19	12.00	2.95	12.00	2.70	12.00	2.45	11.45	2.22	10.29	2.01	9.32	1.84
2	12.00	4.62	12.00	3.72	12.00	3.78	12.00	3.52	12.00	3.26	12.00	2.95	12.00	2.59	8.08	1.68	6.84	1.44	6.36	1.34
7	12.00	5.32	12.00	4.70	12.00	4.28	12.00	3.97	12.00	3.64	12.00	3.37	12.00	2.86	10.28	2.08	8.34	1.73	7.67	1.60
10	12.00	5.74	12.00	4.97	12.00	4.61	12.00	4.25	12.00	3.88	12.00	3.48	12.00	3.00	11.20	2.28	9.90	2.02	8.95	1.82
15	12.00	6.31	12.00	5.65	12.00	5.16	12.00	4.72	12.00	4.27	12.00	3.81	12.00	3.36	12.00	2.55	12.00	2.37	11.09	2.17
18	12.00	6.65	12.00	6.02	12.00	5.48	12.00	5.00	12.00	4.51	12.00	3.97	12.00	3.58	12.00	2.78	12.00	2.54	11.69	2.26
20	12.00	6.87	12.00	6.26	12.00	5.70	12.00	5.19	12.00	4.68	12.00	4.17	12.00	3.72	12.00	2.93	12.00	2.65	12.00	2.32
35					12.00	7.33	12.00	6.42	12.00	5.85	12.00	5.28	12.00	4.71	12.00	4.14	12.00	3.46	12.00	2.90

Note

1. DB : Dry bulb temperature(℃), LWT : Leaving water temperature(℃), LPM : Liter per minute (ℓ /min)
2. TC : Total capacity(kW), EER: Energy efficiency ratio(kW/kW), COP : Coefficient of performance (kW/kW)
3. Direct interpolation is permissible. Do not extrapolate.
4. Measuring procedure follows EN14511.
   - Rated values are based on standard conditions, and it can be found on specifications.
   - Above table values may not be matched according to installation condition. Except for rated value, the performance is not guaranteed.
   - In accordance with the test standard(or nations), the results may vary.
5. The Shaded areas are not guaranteed continuous operation.
6. When used in Cascade, the desired temperature is up to 70℃ and the maximum leaving water temperature of 70℃ can be used in the capacity table.

7. Capacity Tables

◆ FHBW146B0 [HM141HF UB60], FHBW148B0 [HM143HF UB60]

Outdoor Temp. [°C DB]	Water flow rate 40.3 LPM								Water flow rate 25.2 LPM				Water flow rate 20.1 LPM							
	LWT 30 °C		LWT 35 °C		LWT 40 °C		LWT 45 °C		LWT 50 °C		LWT 55 °C		LWT 60°C		LWT 65 °C		LWT 70°C		LWT 75 °C	
	TC	COP	TC	COP	TC	COP	TC	COP	TC	COP	TC	COP	TC	COP	TC	COP	TC	COP	TC	COP
-25	8.88	2.40	8.57	2.20	8.28	2.00	8.01	1.80	7.78	1.59	6.37	1.33								
-20	10.20	2.73	9.97	2.50	9.78	2.31	9.66	2.11	9.48	1.91	8.27	1.70	6.77	1.42						
-15	12.06	3.03	11.99	2.82	11.79	2.60	11.59	2.40	11.29	2.25	10.76	2.14	8.71	1.78	7.17	1.49				
-7	14.00	3.51	14.00	3.19	13.82	2.99	13.63	2.80	13.45	2.60	12.58	2.45	11.27	2.19	10.00	1.97	8.99	1.78		
-4	14.00	3.72	14.00	3.39	13.90	3.20	13.83	2.96	13.83	2.76	13.23	2.55	12.06	2.34	10.88	2.13	9.65	1.91	8.91	1.77
-2	14.00	3.86	14.00	3.52	13.96	3.31	13.95	3.10	14.00	2.85	13.71	2.62	12.59	2.42	11.45	2.22	10.29	2.01	9.32	1.84
2	14.00	4.48	14.00	3.61	14.00	3.67	14.00	3.41	14.00	3.16	14.00	2.86	13.16	2.54	8.08	1.68	6.84	1.44	6.36	1.34
7	14.00	5.16	14.00	4.50	14.00	4.16	14.00	3.85	14.00	3.54	14.00	3.27	14.00	2.78	10.28	2.08	8.34	1.73	7.67	1.60
10	14.00	5.57	14.00	4.82	14.00	4.48	14.00	4.12	14.00	3.76	14.00	3.38	14.00	2.91	11.20	2.28	9.90	2.02	8.95	1.82
15	14.00	6.12	14.00	5.48	14.00	5.01	14.00	4.58	14.00	4.14	14.00	3.70	14.00	3.26	12.72	2.53	12.02	2.37	11.09	2.17
18	14.00	6.45	14.00	5.84	14.00	5.32	14.00	4.85	14.00	4.38	14.00	3.86	14.00	3.47	13.82	2.70	12.89	2.50	11.69	2.26
20	14.00	6.67	14.00	6.08	14.00	5.53	14.00	5.04	14.00	4.54	14.00	4.05	14.00	3.61	14.00	2.84	13.47	2.59	12.09	2.32
35					14.00	7.12	14.00	6.23	14.00	5.68	14.00	5.12	14.00	4.57	14.00	4.01	14.00	3.34	12.80	2.85

Note

1. DB : Dry bulb temperature(℃), LWT : Leaving water temperature(℃), LPM : Liter per minute (ℓ /min)
2. TC : Total capacity(kW), EER: Energy efficiency ratio(kW/kW), COP : Coefficient of performance (kW/kW)
3. Direct interpolation is permissible. Do not extrapolate.
4. Measuring procedure follows EN14511.
   - Rated values are based on standard conditions, and it can be found on specifications.
   - Above table values may not be matched according to installation condition. Except for rated value, the performance is not guaranteed.
   - In accordance with the test standard(or nations), the results may vary.
5. The Shaded areas are not guaranteed continuous operation.
6. When used in Cascade, the desired temperature is up to 70℃ and the maximum leaving water temperature of 70℃ can be used in the capacity table.

7. Capacity Tables

◆ FHBW166B0 [HM161HF UB60], FHBW168B0 [HM163HF UB60]

Outdoor Temp. [°C DB]	Water flow rate 46.0 LPM								Water flow rate 28.8 LPM				Water flow rate 23.0 LPM							
	LWT 30 °C		LWT 35 °C		LWT 40 °C		LWT 45 °C		LWT 50 °C		LWT 55 °C		LWT 60°C		LWT 65 °C		LWT 70°C		LWT 75 °C	
	TC	COP	TC	COP	TC	COP	TC	COP	TC	COP	TC	COP	TC	COP	TC	COP	TC	COP	TC	COP
-25	9.41	2.37	9.08	2.18	8.76	1.98	8.48	1.78	7.81	1.59	6.37	1.33								
-20	10.80	2.70	10.56	2.48	10.35	2.28	10.23	2.09	9.48	1.91	8.27	1.70	6.77	1.42						
-15	13.36	2.96	13.28	2.75	12.74	2.56	12.15	2.38	11.29	2.25	10.76	2.14	8.71	1.78	7.17	1.49				
-7	16.00	3.39	16.00	3.09	15.17	2.92	14.35	2.77	13.52	2.59	12.58	2.45	11.27	2.19	10.00	1.97	8.99	1.78		
-4	16.00	3.61	16.00	3.28	15.43	3.12	14.85	2.91	14.29	2.74	13.23	2.55	12.06	2.34	10.88	2.13	9.65	1.91	8.91	1.77
-2	16.00	3.75	16.00	3.41	15.69	3.22	15.34	3.03	14.81	2.82	13.71	2.62	12.59	2.42	11.45	2.22	10.29	2.01	9.32	1.84
2	16.00	4.34	16.00	3.50	16.00	3.55	16.00	3.31	16.00	3.06	14.84	2.82	13.16	2.54	8.08	1.68	6.84	1.44	6.36	1.34
7	16.00	5.01	16.00	4.30	16.00	4.03	16.00	3.74	16.00	3.43	16.00	3.17	14.25	2.77	10.28	2.08	8.34	1.73	7.67	1.60
10	16.00	5.41	16.00	4.68	16.00	4.34	16.00	4.00	16.00	3.65	16.00	3.28	14.92	2.87	11.20	2.28	9.90	2.02	8.95	1.82
15	16.00	5.94	16.00	5.32	16.00	4.86	16.00	4.44	16.00	4.02	16.00	3.58	16.00	3.16	12.72	2.53	12.02	2.37	11.09	2.17
18	16.00	6.25	16.00	5.66	16.00	5.16	16.00	4.71	16.00	4.25	16.00	3.74	16.00	3.37	13.82	2.70	12.89	2.50	11.69	2.26
20	16.00	6.47	16.00	5.90	16.00	5.37	16.00	4.88	16.00	4.40	16.00	3.93	16.00	3.50	14.56	2.81	13.47	2.59	12.09	2.32
35					16.00	6.90	16.00	6.05	16.00	5.51	16.00	4.97	16.00	4.43	16.00	3.89	14.40	3.32	12.80	2.85

Note

1. DB : Dry bulb temperature(℃), LWT : Leaving water temperature(℃), LPM : Liter per minute (ℓ /min)
2. TC : Total capacity(kW), EER: Energy efficiency ratio(kW/kW), COP : Coefficient of performance (kW/kW)
3. Direct interpolation is permissible. Do not extrapolate.
4. Measuring procedure follows EN14511.
   - Rated values are based on standard conditions, and it can be found on specifications.
   - Above table values may not be matched according to installation condition. Except for rated value, the performance is not guaranteed.
   - In accordance with the test standard(or nations), the results may vary.
5. The Shaded areas are not guaranteed continuous operation.
6. When used in Cascade, the desired temperature is up to 70℃ and the maximum leaving water temperature of 70℃ can be used in the capacity table.

7. Capacity Tables

7.2 Cooling Operation

■ Maximum Capacity

◆ FHBW076B0 [HM071HF UB40], FHBW078B0 [HM073HF UB40]

Outdoor Temperature [°C DB]	Water flow rate 20.1 LPM													
	LWT 7 °C		LWT 10 °C		LWT 13 °C		LWT 15 °C		LWT 18 °C		LWT 20 °C		LWT 22 °C	
	TC	EER	TC	EER	TC	EER	TC	EER	TC	EER	TC	EER	TC	EER
20	5.30	3.59	6.00	3.94	6.70	4.29	7.00	4.51	7.00	4.84	7.00	5.05	7.00	5.27
30	5.10	3.06	5.40	3.42	5.80	3.74	6.20	3.93	7.00	4.12	7.00	4.19	7.00	4.23
35	5.00	2.80	5.40	3.24	5.80	3.67	6.20	3.96	6.80	4.40	6.80	3.81	7.00	3.71
40	4.60	2.30	4.90	2.58	5.30	2.85	5.60	2.99	6.20	3.14	6.70	3.18	7.00	3.20
45	4.20	1.80	4.70	1.98	5.30	2.15	5.60	2.27	6.20	2.45	6.50	2.56	7.00	2.68

Note

1. DB : Dry bulb temperature(℃), LWT : Leaving water temperature(℃), LPM : Liter per minute (ℓ /min)
2. TC : Total capacity(kW), EER: Energy efficiency ratio(kW/kW), COP : Coefficient of performance (kW/kW)
3. Direct interpolation is permissible. Do not extrapolate.
4. Measuring procedure follows EN14511.
   - Rated values are based on standard conditions, and it can be found on specifications.
   - Above table values may not be matched according to installation condition. Except for rated value, the performance is not guaranteed.
   - In accordance with the test standard(or nations), the results may vary.
5. The Shaded areas are not guaranteed continuous operation.

7. Capacity Tables

◆ FHBW096B0 [HM091HF UB40], FHBW098B0 [HM093HF UB40]

Outdoor Temperature [°C DB]	Water flow rate 25.9 LPM													
	LWT 7 °C		LWT 10 °C		LWT 13 °C		LWT 15 °C		LWT 18 °C		LWT 20 °C		LWT 22 °C	
	TC	EER	TC	EER	TC	EER	TC	EER	TC	EER	TC	EER	TC	EER
20	5.80	3.49	6.70	3.76	7.50	4.02	9.00	4.20	9.00	4.47	9.00	4.65	9.00	4.83
30	5.60	2.90	6.40	3.09	7.20	3.28	7.70	3.42	9.00	3.66	9.00	3.83	9.00	4.00
35	5.50	2.60	6.30	2.73	7.20	2.86	7.80	2.95	9.00	3.08	9.00	3.39	9.00	3.59
40	5.00	2.08	5.70	2.27	6.40	2.47	6.80	2.61	7.40	2.84	7.70	3.01	9.00	3.18
45	4.40	1.55	5.10	1.79	5.70	2.04	6.10	2.20	6.80	2.44	7.20	2.61	7.60	2.77

Note

1. DB : Dry bulb temperature(℃), LWT : Leaving water temperature(℃), LPM : Liter per minute (ℓ /min)
2. TC : Total capacity(kW), EER: Energy efficiency ratio(kW/kW), COP : Coefficient of performance (kW/kW)
3. Direct interpolation is permissible. Do not extrapolate.
4. Measuring procedure follows EN14511.
   - Rated values are based on standard conditions, and it can be found on specifications.
   - Above table values may not be matched according to installation condition. Except for rated value, the performance is not guaranteed.
   - In accordance with the test standard(or nations), the results may vary.
5. The Shaded areas are not guaranteed continuous operation.

7. Capacity Tables

◆ FHBW098X0 [HM093HFX UB60]

Outdoor Temperature [°C DB]	Water flow rate 25.9 LPM													
	LWT 7 °C		LWT 10 °C		LWT 13 °C		LWT 15 °C		LWT 18 °C		LWT 20 °C		LWT 22 °C	
	TC	EER	TC	EER	TC	EER	TC	EER	TC	EER	TC	EER	TC	EER
20	9.00	4.30	9.00	4.65	9.00	5.01	9.00	5.26	9.00	5.63	9.00	5.88	9.00	6.14
30	9.00	3.59	9.00	4.00	9.00	4.30	9.00	4.55	9.00	4.80	9.00	4.96	9.00	4.96
35	9.00	3.24	9.00	3.44	9.00	3.65	9.00	3.85	9.00	3.90	9.00	4.21	9.00	4.37
40	8.01	2.84	8.64	3.01	9.00	3.17	9.00	3.32	9.00	3.49	9.00	3.64	9.00	3.78
45	7.02	2.41	7.63	2.57	8.23	2.71	8.63	2.80	9.00	2.95	9.00	3.07	9.00	3.19

Note

1. DB : Dry bulb temperature(℃), LWT : Leaving water temperature(℃), LPM : Liter per minute (ℓ /min)
2. TC : Total capacity(kW), EER: Energy efficiency ratio(kW/kW), COP : Coefficient of performance (kW/kW)
3. Direct interpolation is permissible. Do not extrapolate.
4. Measuring procedure follows EN14511.
   - Rated values are based on standard conditions, and it can be found on specifications.
   - Above table values may not be matched according to installation condition. Except for rated value, the performance is not guaranteed.
   - In accordance with the test standard(or nations), the results may vary.
5. The Shaded areas are not guaranteed continuous operation.

7. Capacity Tables

◆ FHBW126B0 [HM121HF UB60], FHBW128B0 [HM123HF UB60]

Outdoor Temperature [°C DB]	Water flow rate 33.1 LPM													
	LWT 7 °C		LWT 10 °C		LWT 13 °C		LWT 15 °C		LWT 18 °C		LWT 20 °C		LWT 22 °C	
	TC	EER	TC	EER	TC	EER	TC	EER	TC	EER	TC	EER	TC	EER
20	11.50	4.02	11.50	4.35	11.50	4.69	11.50	4.92	11.50	5.27	11.50	5.50	11.50	5.74
30	10.97	3.41	11.50	3.79	11.50	4.09	11.50	4.33	11.50	4.56	11.50	4.68	11.50	4.64
35	10.50	3.12	11.28	3.33	11.50	3.53	11.50	3.74	11.50	3.78	11.50	4.02	11.50	4.09
40	9.35	2.74	10.08	2.91	10.80	3.07	11.27	3.22	11.50	3.36	11.50	3.45	11.50	3.54
45	8.19	2.34	8.90	2.49	9.61	2.62	10.07	2.70	10.77	2.82	11.23	2.90	11.50	2.99

Note

1. DB : Dry bulb temperature(℃), LWT : Leaving water temperature(℃), LPM : Liter per minute (ℓ /min)
2. TC : Total capacity(kW), EER: Energy efficiency ratio(kW/kW), COP : Coefficient of performance (kW/kW)
3. Direct interpolation is permissible. Do not extrapolate.
4. Measuring procedure follows EN14511.
   - Rated values are based on standard conditions, and it can be found on specifications.
   - Above table values may not be matched according to installation condition. Except for rated value, the performance is not guaranteed.
   - In accordance with the test standard(or nations), the results may vary.
5. The Shaded areas are not guaranteed continuous operation.

7. Capacity Tables

◆ FHBW146B0 [HM141HF UB60], FHBW148B0 [HM143F UB60]

Outdoor Temperature [°C DB]	Water flow rate 34.5 LPM													
	LWT 7 °C		LWT 10 °C		LWT 13 °C		LWT 15 °C		LWT 18 °C		LWT 20 °C		LWT 22 °C	
	TC	EER	TC	EER	TC	EER	TC	EER	TC	EER	TC	EER	TC	EER
20	12.00	3.97	12.00	4.30	12.00	4.63	12.00	4.85	12.00	5.20	12.00	5.43	12.00	5.66
30	12.00	3.32	12.00	3.71	12.00	4.01	12.00	4.26	12.00	4.49	12.00	4.62	12.00	4.58
35	12.00	2.99	12.00	3.22	12.00	3.45	12.00	3.67	12.00	3.70	12.00	3.97	12.00	4.03
40	10.68	2.64	11.52	2.81	12.00	2.98	12.00	3.14	12.00	3.29	12.00	3.40	12.00	3.49
45	9.36	2.27	10.17	2.41	10.98	2.52	11.51	2.60	12.00	2.73	12.00	2.84	12.00	2.95

Note

1. DB : Dry bulb temperature(℃), LWT : Leaving water temperature(℃), LPM : Liter per minute (ℓ /min)
2. TC : Total capacity(kW), EER: Energy efficiency ratio(kW/kW), COP : Coefficient of performance (kW/kW)
3. Direct interpolation is permissible. Do not extrapolate.
4. Measuring procedure follows EN14511.
   - Rated values are based on standard conditions, and it can be found on specifications.
   - Above table values may not be matched according to installation condition. Except for rated value, the performance is not guaranteed.
   - In accordance with the test standard(or nations), the results may vary.
5. The Shaded areas are not guaranteed continuous operation.

7. Capacity Tables

◆ FHBW166B0 [HM161HF UB60], FHBW168B0 [HM163HF UB60]

Outdoor Temperature [°C DB]	Water flow rate 35.9 LPM													
	LWT 7 °C		LWT 10 °C		LWT 13 °C		LWT 15 °C		LWT 18 °C		LWT 20 °C		LWT 22 °C	
	TC	EER	TC	EER	TC	EER	TC	EER	TC	EER	TC	EER	TC	EER
20	12.50	3.91	12.50	4.24	12.50	4.56	12.50	4.78	12.50	5.12	12.50	5.35	12.50	5.58
30	12.50	3.27	12.50	3.64	12.50	3.92	12.50	4.15	12.50	4.37	12.50	4.52	12.50	4.51
35	12.50	2.95	12.50	3.14	12.50	3.33	12.50	3.51	12.50	3.70	12.50	3.84	12.50	3.98
40	12.02	2.55	12.50	2.74	12.50	2.90	12.50	3.04	12.50	3.18	12.50	3.32	12.50	3.44
45	10.03	2.23	10.78	2.37	11.54	2.49	12.05	2.56	12.50	2.69	12.50	2.80	12.50	2.91

Note

1. DB : Dry bulb temperature(℃), LWT : Leaving water temperature(℃), LPM : Liter per minute (ℓ /min)
2. TC : Total capacity(kW), EER: Energy efficiency ratio(kW/kW), COP : Coefficient of performance (kW/kW)
3. Direct interpolation is permissible. Do not extrapolate.
4. Measuring procedure follows EN14511.
   - Rated values are based on standard conditions, and it can be found on specifications.
   - Above table values may not be matched according to installation condition. Except for rated value, the performance is not guaranteed.
   - In accordance with the test standard(or nations), the results may vary.
5. The Shaded areas are not guaranteed continuous operation.

8. Operation Limits

8.1 Heating

■ FHBW076B0 [HM071HF UB40], FHBW078B0 [HM073HF UB40] FHBW096B0 [HM091HF UB40], FHBW098B0 [HM093HF UB40]

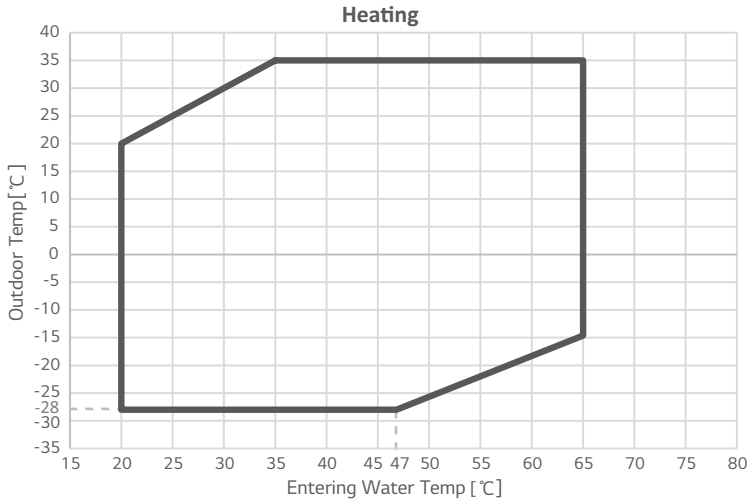

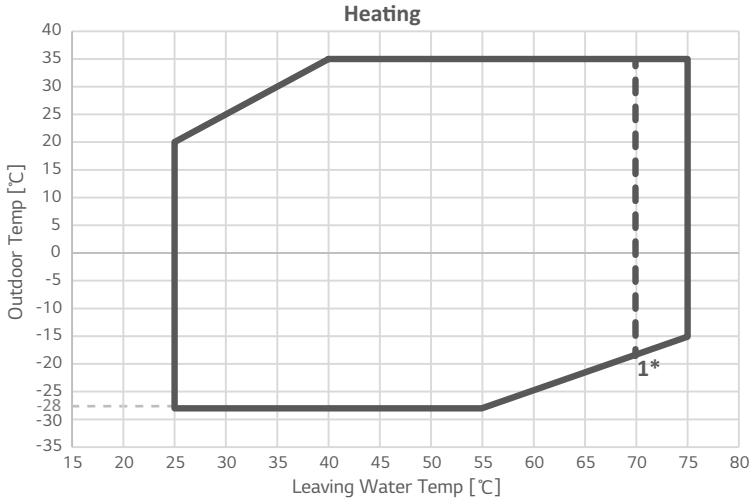

Note

- DHW operation without electric heater : max. 65 °C
- DHW operation with electric heater : max. 80 °C
- 1* : When used in Cascade, the maximum leaving water temperature is 70℃.

8. Operation Limits

■ FHBW126B0 [HM121HF UB60] / FHBW146B0 [HM141HF UB60] FHBW166B0 [HM161HF UB60] / FHBW098X0 [HM093HFX UB60] FHBW128B0 [HM123HF UB60] / FHBW148B0 [HM143HF UB60] FHBW168B0 [HM163HF UB60]

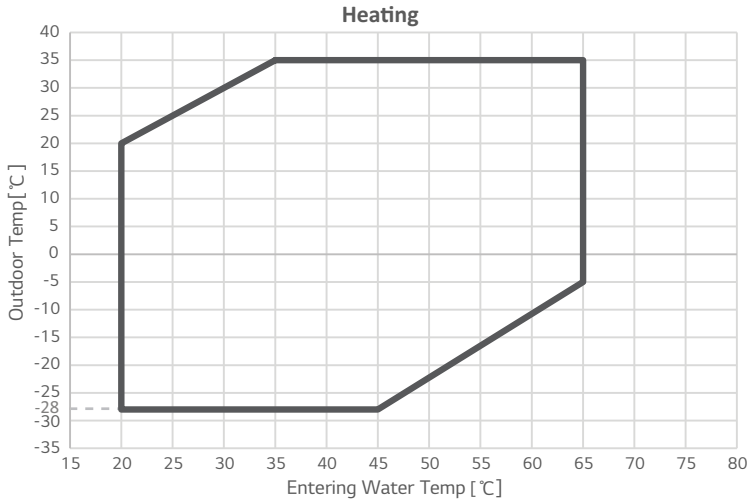

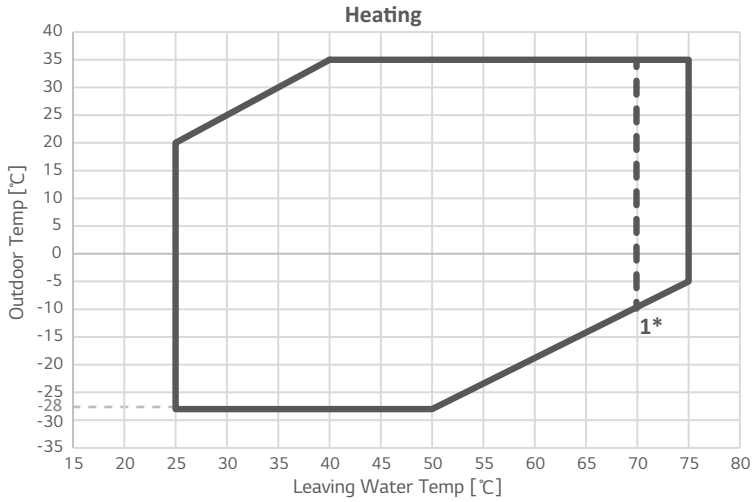

Note

- DHW operation without electric heater : max. 65 ℃
- DHW operation with electric heater : max. 80 ℃
- 1* : When used in Cascade, the maximum leaving water temperature is 70℃.

8. Operation Limits

8.2 Cooling

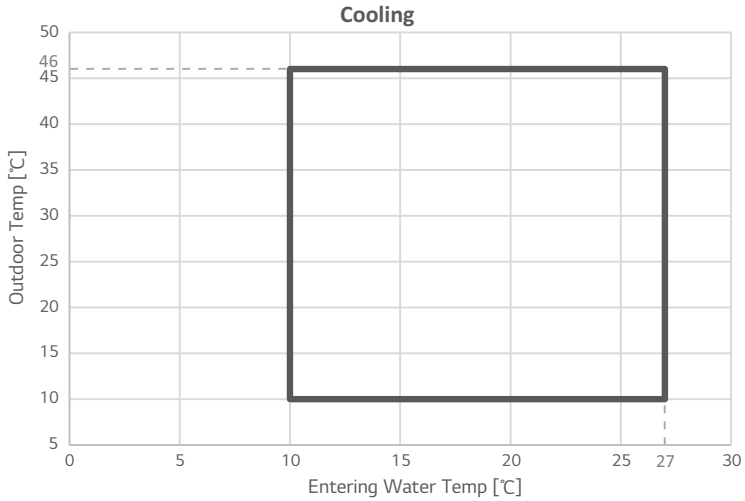

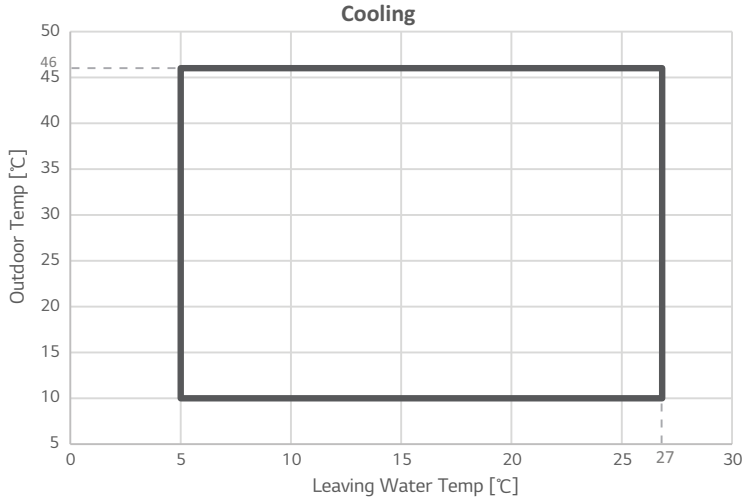

9. Sound levels

9.1 Sound Power Level

FHBW076B0 [HM071HF UB40] / FHBW078B0 [HM073HF UB40]

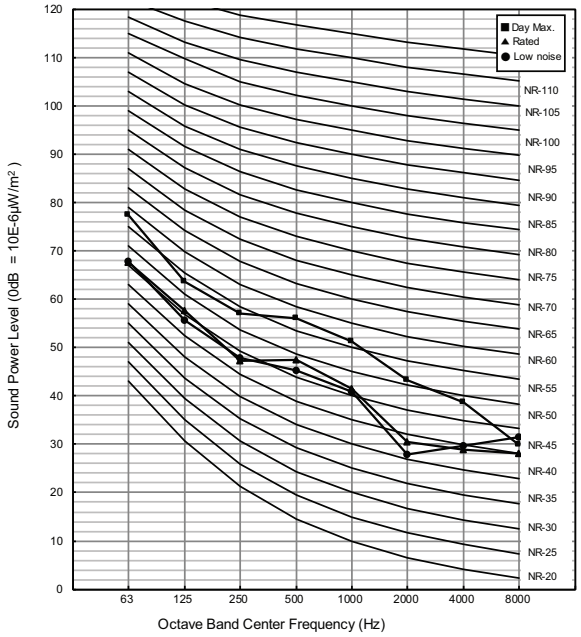

Octave Band [Hz]	63	125	250	500	1000	2000	4000	8000	*Overall [dB(A)]*
Day Max. [dB]	77.4	63.6	57.1	56.1	51.3	43.3	38.7	29.9	58.0
Rated [dB]	67.7	57.6	47.3	47.4	41.5	30.6	28.9	28.1	49.0
Low noise [dB]	67.8	55.7	47.9	45.3	40.9	27.9	29.7	31.5	48.0

Model		Heating [dB(A)]		
Outdoor Unit	**Indoor Unit**	**Rated**	**Low Noise**	**Daytime Max**
FHBW076B0 [HM071HF UB40]	FHNW16606C0 [HN1616HC NK0]	49.0	48.0	58.0
FHBW078B0 [HM073HF UB40]	FHNW16809C0 [HN1639HC NK0]	49.0	48.0	58.0

Note

1. Data is valid at diffuse field condition.
2. Reference acoustic intensity 0dB = 10E-6μW/m^2
3. Sound power level is measured on the rated condition in the reverberation rooms. Refer to the Model Specifications for nominal conditions(Power source and Ambient temperature, etc)
4. Sound levels can be increased in accordance with installation and operating conditions.
5. Sound level will vary depending on a range of factors such as the construction (acoustic absorption coefficient) of particular installed place in which the equipment in installed.
6. Sound power level is measured in accordance with EN 12102-1 and ISO 9614.
   - Rated : This mode is measured on the rated condition in the semi-anechoic rooms. Therefore, these values may vary depending on operation conditions.
   - Daytime max : This mode is measured based on max. fan RPM and max. compressor Hz. that can be reached under outdoor air temperature 2°C.
   - Low noise : This mode lowers noise by limiting the compressor Hz. and fan RPM, and thus the performance may be limited.

9. Sound levels

FHBW096B0 [HM091HF UB40] / FHBW098B0 [HM093HF UB40]

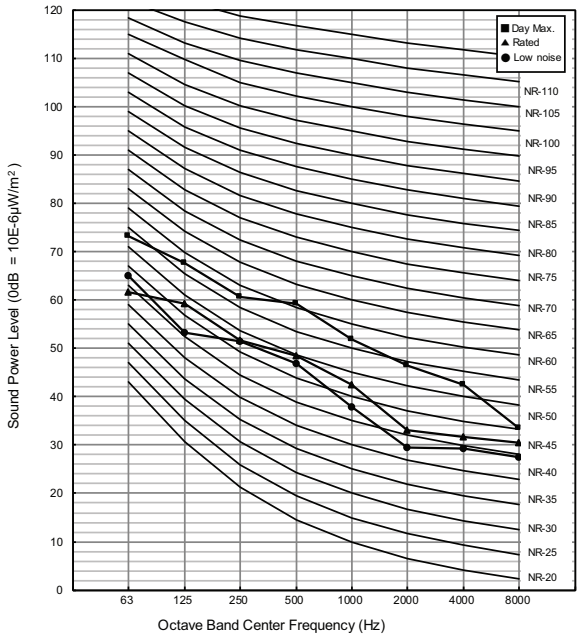

Octave Band [Hz]	63	125	250	500	1000	2000	4000	8000	*Overall [dB(A)]*
Day Max. [dB]	73.3	67.6	60.6	59.3	51.9	46.5	42.5	33.5	60.0
Rated [dB]	61.6	59.2	51.7	48.4	42.5	33.1	31.6	30.4	50.0
Low noise [dB]	65.1	53.2	51.4	46.8	37.9	29.4	29.2	27.5	48.0

Model		Heating [dB(A)]		
Outdoor Unit	**Indoor Unit**	**Rated**	**Low Noise**	**Daytime Max**
FHBW096B0 [HM091HF UB40]	FHNW16606C0 [HN1616HC NK0]	50.0	48.0	60.0
FHBW098B0 [HM093HF UB40]	FHNW16809C0 [HN1639HC NK0]	50.0	48.0	60.0

Note

1. Data is valid at diffuse field condition.
2. Reference acoustic intensity 0dB = 10E-6μW/m^2
3. Sound power level is measured on the rated condition in the reverberation rooms. Refer to the Model Specifications for nominal conditions(Power source and Ambient temperature, etc)
4. Sound levels can be increased in accordance with installation and operating conditions.
5. Sound level will vary depending on a range of factors such as the construction (acoustic absorption coefficient) of particular installed place in which the equipment in installed.
6. Sound power level is measured in accordance with EN 12102-1 and ISO 9614.
   - Rated : This mode is measured on the rated condition in the semi-anechoic rooms. Therefore, these values may vary depending on operation conditions.
   - Daytime max : This mode is measured based on max. fan RPM and max. compressor Hz. that can be reached under outdoor air temperature 2°C.
   - Low noise : This mode lowers noise by limiting the compressor Hz. and fan RPM, and thus the performance may be limited.

9. Sound levels

FHBW098X0 [HM093HFX UB60]

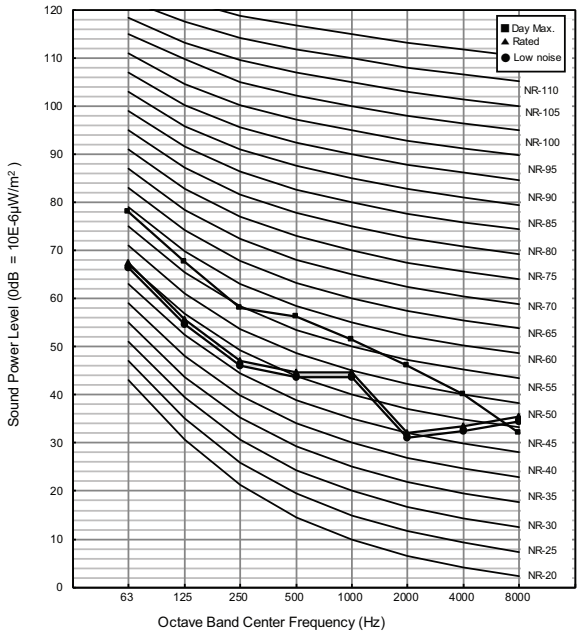

Octave Band [Hz]	63	125	250	500	1000	2000	4000	8000	*Overall [dB(A)]*
Day Max. [dB]	78.0	67.6	58.1	56.3	51.5	46.0	40.0	32.0	59.0
Rated [dB]	67.4	55.7	47.1	44.6	44.7	32.1	33.4	35.4	49.0
Low noise [dB]	66.4	54.7	46.1	43.6	43.7	31.1	32.4	34.4	48.0

Model		Heating [dB(A)]		
Outdoor Unit	**Indoor Unit**	**Rated**	**Low Noise**	**Daytime Max**
FHBW098X0 [HM093HFX UB60]	FHNW16809C0 [HN1639HC NK0]	49.0	48.0	59.0

Note

1. Data is valid at diffuse field condition.
2. Reference acoustic intensity 0dB = 10E-6μW/m^2
3. Sound power level is measured on the rated condition in the reverberation rooms. Refer to the Model Specifications for nominal conditions(Power source and Ambient temperature, etc)
4. Sound levels can be increased in accordance with installation and operating conditions.
5. Sound level will vary depending on a range of factors such as the construction (acoustic absorption coefficient) of particular installed place in which the equipment in installed.
6. Sound power level is measured in accordance with EN 12102-1 and ISO 9614.
   - Rated : This mode is measured on the rated condition in the semi-anechoic rooms. Therefore, these values may vary depending on operation conditions.
   - Daytime max : This mode is measured based on max. fan RPM and max. compressor Hz. that can be reached under outdoor air temperature 2°C.
   - Low noise : This mode lowers noise by limiting the compressor Hz. and fan RPM, and thus the performance may be limited.

9. Sound levels

FHBW126B0 [HM121HF UB60] / FHBW128B0 [HM123HF UB60]

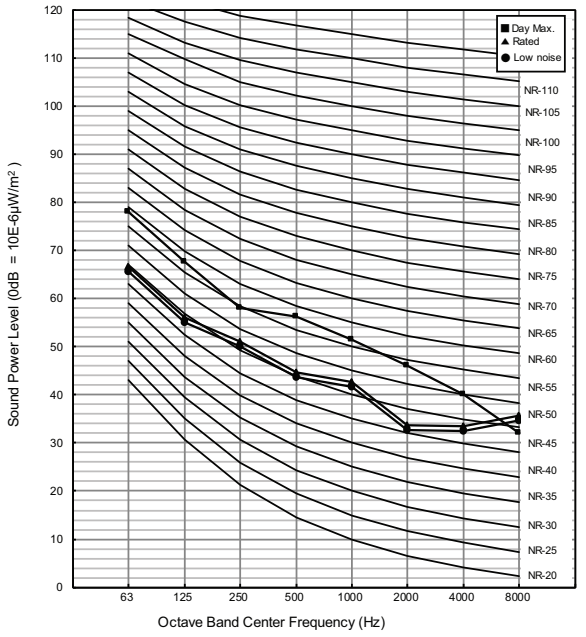

Octave Band [Hz]	63	125	250	500	1000	2000	4000	8000	*Overall [dB(A)]*
Day Max. [dB]	78.0	67.6	58.1	56.3	51.5	46.0	40.0	32.0	59.0
Rated [dB]	66.7	56.1	51.0	44.7	42.7	33.7	33.4	35.7	49.0
Low noise [dB]	65.7	55.1	50.0	43.7	41.7	32.7	32.4	34.7	48.0

Model		Heating [dB(A)]		
Outdoor Unit	**Indoor Unit**	**Rated**	**Low Noise**	**Daytime Max**
FHBW126B0 [HM121HF UB60]	FHNW16606C0 [HN1616HC NK0]	49.0	48.0	59.0
FHBW128B0 [HM123HF UB60]	FHNW16809C0 [HN1639HC NK0]	49.0	48.0	59.0

Note

1. Data is valid at diffuse field condition.
2. Reference acoustic intensity 0dB = 10E-6μW/m^2
3. Sound power level is measured on the rated condition in the reverberation rooms. Refer to the Model Specifications for nominal conditions(Power source and Ambient temperature, etc)
4. Sound levels can be increased in accordance with installation and operating conditions.
5. Sound level will vary depending on a range of factors such as the construction (acoustic absorption coefficient) of particular installed place in which the equipment in installed.
6. Sound power level is measured in accordance with EN 12102-1 and ISO 9614.
   - Rated : This mode is measured on the rated condition in the semi-anechoic rooms. Therefore, these values may vary depending on operation conditions.
   - Daytime max : This mode is measured based on max. fan RPM and max. compressor Hz. that can be reached under outdoor air temperature 2°C.
   - Low noise : This mode lowers noise by limiting the compressor Hz. and fan RPM, and thus the performance may be limited.

9. Sound levels

FHBW146B0 [HM141HF UB60] / FHBW148B0 [HM143HF UB60]

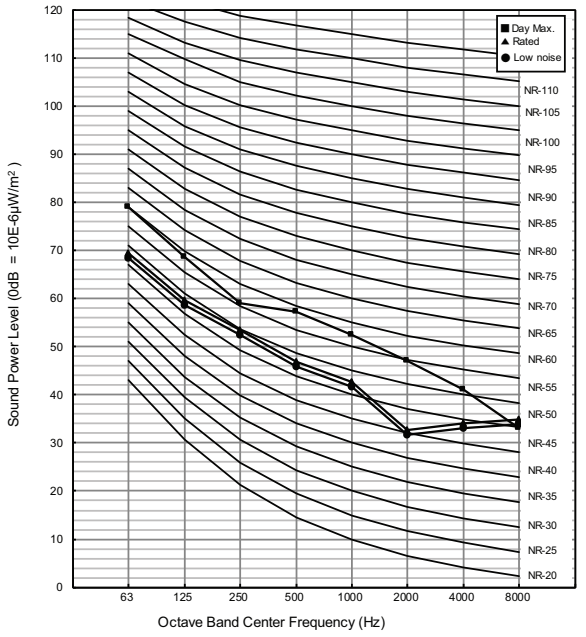

Octave Band [Hz]	63	125	250	500	1000	2000	4000	8000	*Overall [dB(A)]*
Day Max. [dB]	79.0	68.6	59.1	57.3	52.5	47.0	41.0	33.0	60.0
Rated [dB]	69.5	59.7	53.5	46.8	42.7	32.6	34.0	34.8	51.0
Low noise [dB]	68.5	58.7	52.5	45.8	41.7	31.6	33.0	33.8	50.0

Model		Heating [dB(A)]		
Outdoor Unit	**Indoor Unit**	**Rated**	**Low Noise**	**Daytime Max**
FHBW146B0 [HM141HF UB60]	FHNW16606C0 [HN1616HC NK0]	51.0	50.0	60.0
FHBW148B0 [HM143HF UB60]	FHNW16809C0 [HN1639HC NK0]	51.0	50.0	60.0

Note

1. Data is valid at diffuse field condition.
2. Reference acoustic intensity 0dB = 10E-6μW/m^2
3. Sound power level is measured on the rated condition in the reverberation rooms. Refer to the Model Specifications for nominal conditions(Power source and Ambient temperature, etc)
4. Sound levels can be increased in accordance with installation and operating conditions.
5. Sound level will vary depending on a range of factors such as the construction (acoustic absorption coefficient) of particular installed place in which the equipment in installed.
6. Sound power level is measured in accordance with EN 12102-1 and ISO 9614.
   - Rated : This mode is measured on the rated condition in the semi-anechoic rooms. Therefore, these values may vary depending on operation conditions.
   - Daytime max : This mode is measured based on max. fan RPM and max. compressor Hz. that can be reached under outdoor air temperature 2°C.
   - Low noise : This mode lowers noise by limiting the compressor Hz. and fan RPM, and thus the performance may be limited.

9. Sound levels

FHBW166B0 [HM161HF UB60] / FHBW168B0 [HM163HF UB60]

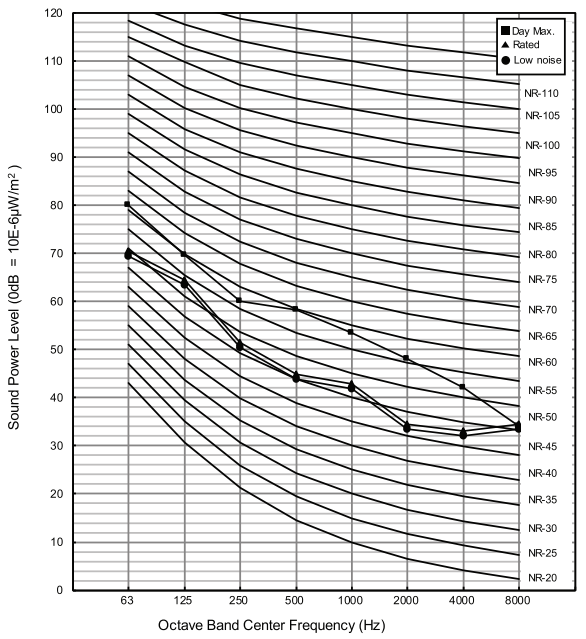

Octave Band [Hz]	63	125	250	500	1000	2000	4000	8000	*Overall [dB(A)]*
Day Max. [dB]	80.0	69.6	60.1	58.3	53.5	48.0	42.0	34.0	61.0
Rated [dB]	70.5	64.5	51.5	44.8	42.9	34.4	33.0	34.4	52.0
Low noise [dB]	69.5	63.5	50.5	43.8	41.9	33.4	32.0	33.4	51.0

Model		Heating [dB(A)]		
Outdoor Unit	**Indoor Unit**	**Rated**	**Low Noise**	**Daytime Max**
FHBW166B0 [HM161HF UB60]	FHNW16606C0 [HN1616HC NK0]	52.0	51.0	61.0
FHBW168B0 [HM163HF UB60]	FHNW16809C0 [HN1639HC NK0]	52.0	51.0	61.0

Note

1. Data is valid at diffuse field condition.
2. Reference acoustic intensity 0dB = 10E-6μW/m^2
3. Sound power level is measured on the rated condition in the reverberation rooms. Refer to the Model Specifications for nominal conditions(Power source and Ambient temperature, etc)
4. Sound levels can be increased in accordance with installation and operating conditions.
5. Sound level will vary depending on a range of factors such as the construction (acoustic absorption coefficient) of particular installed place in which the equipment in installed.
6. Sound power level is measured in accordance with EN 12102-1 and ISO 9614.
   - Rated : This mode is measured on the rated condition in the semi-anechoic rooms. Therefore, these values may vary depending on operation conditions.
   - Daytime max : This mode is measured based on max. fan RPM and max. compressor Hz. that can be reached under outdoor air temperature 2°C.
   - Low noise : This mode lowers noise by limiting the compressor Hz. and fan RPM, and thus the performance may be limited.

10. Hydraulic Performance

The water pump is variable type which is capable to change flow rate, so it may be required to change default water pump capacity in case of noise by water flow. In most case, however, it is strongly recommended to set capacity as Maximum.

■ Pressure Drop

◆ For GRUNDFOS Water Pump

Capacity [kW]	Rated flow-rate [LPM]	Pump Head [m] (at rated flow- rate)	Product pressure drop [m] (Plate heat exchanger)	Serviceable Head [m]	Min. flow-rate [LPM] (Recommend)
7	20.1	7.3	0.3	7.0	15
9*	25.9	6.1	0.4	5.7	
9**	25.9	10.0	0.4	9.6	20
12	34.5	9.8	0.8	9.0	
14	40.3	9.3	1.1	8.2	
16	46.0	8.3	1.4	6.9	

◆ For OH SUNG Water Pump

Capacity [kW]	Rated flow-rate [LPM]	Pump Head [m] (at rated flow- rate)	Product pressure drop [m] (Plate heat exchanger)	Serviceable Head [m]	Min. flow-rate [LPM] (Recommend)
7	20.1	10.7	0.3	10.4	15
9	25.9	10.3	0.4	9.9	
12	34.5	9.7	0.8	8.9	20
14	40.3	9.1	1.1	8.0	
16	46.0	8.5	1.4	7.1	

Note

- To secure enough water flow rate, do not set water pump capacity as Minimum.
  It can lead unexpected flow rate error CH14.
- When installing the product, install additional pump in consideration of the pressure loss and pump performance.
- If flow-rate is low, overloading of product can occur.
  * : FHBW096B0 [HM091HF UB40], FHBW098B0 [HM093HF UB40]
  ** : FHBW098X0 [HM093HFX UB60]

10. Hydraulic Performance

■ GRUNDFOS Water Pump (UPM3K 20 - 75 CHBL)

Q-H Chart

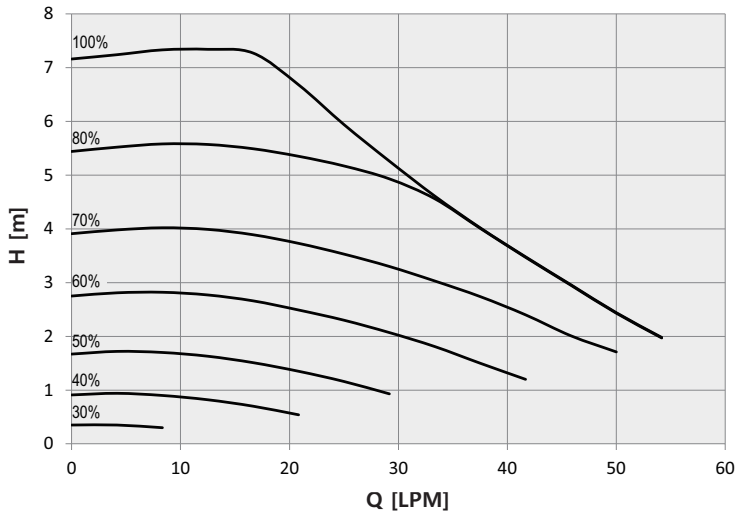

Note

Performance test based on standard ISO 9906 with pre-pressure 2.0 bar and liquid temperature 20°C.

■ GRUNDFOS Water Pump (UPML 20 - 105 CHBL)

Q-H Chart

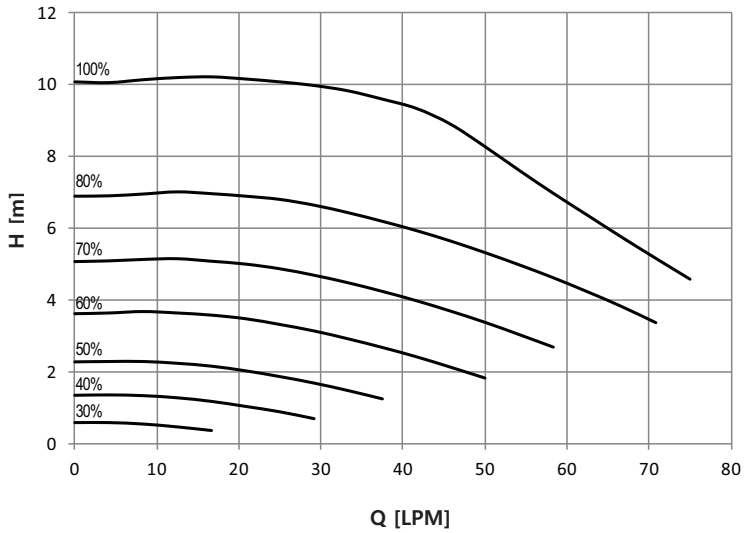

Note

Performance test based on standard ISO 9906 with pre-pressure 2.0 bar and liquid temperature 20°C.

10. Hydraulic Performance

■ OH SUNG Water Pump (ODM - 061P)

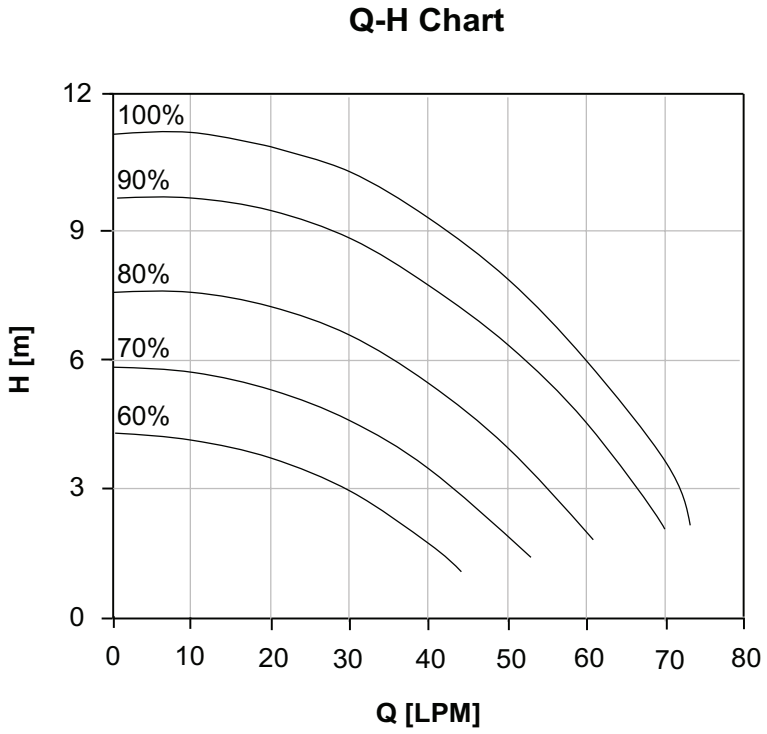

Note

Performance test based on standard ISO 9906 with pre-pressure 2.0 bar and liquid temperature 20°C.

Installation

Installation of Outdoor Unit

1. Information of Refrigerant

■ Refrigerant R290

- The refrigerant R290 has a lower GWP(Global Warming Potential)value than R32.
- The Ozone Depletion Potential (ODP) of R290 is 0, and Global Warming Potential(GWP) is 3.
- Refrigerant piping consists of copper/steel pipes, joints, and other fittings. All components must be selected and installed in conformity with the standards pertaining to the Refrigeration Safety Regulation.
- Same piping as for R32 can be used.
- The place where the unit shall be connected to the outdoor unit.
- The place where the unit is not affected by an electrical noise.
- The place where there should not be any heat source or steam near the unit.

⚠ WARNING

- This product contains flammable gases (Refrigerant type : R290).
  DO NOT emit refrigerant gases into the atmosphere.
- The refrigerant R290 has Higher Flammability than R32. But It does not leak normally. If the refrigerant leaks in the installed place and contact with burning energy, it may cause fire, or a harmful gas.
- If there is some leak, turn off any combustion devices, ventilate the installed place, and contact the dealer from which you purchased the unit. Do not use the unit until the refrigerant leaked is repaired.
- Only use R290 as refrigerant. Other substances may cause explosions and accidents.

⚠ CAUTION

- The wall thickness of the piping should comply with the relevant local and national regulations for the designed pressure.
- Any unapproved pipe must not be used.
- Do not heat pipes more than necessary to prevent them from softening.

2. Selection of the best Location

2.1 Best Location

- The outdoor unit is installed outside to exchange heat with ambient air.
- Therefore, it is important to secure proper space around the outdoor unit and care for specific external conditions. This chapter presents a guide to install the outdoor unit, make a route to connect with the indoor, and what to do when installed around seaside.

- For quiet place

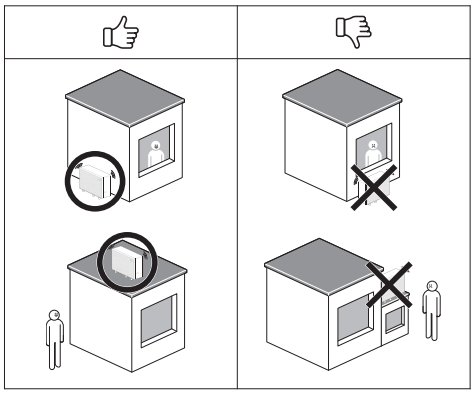

- For good ventilation

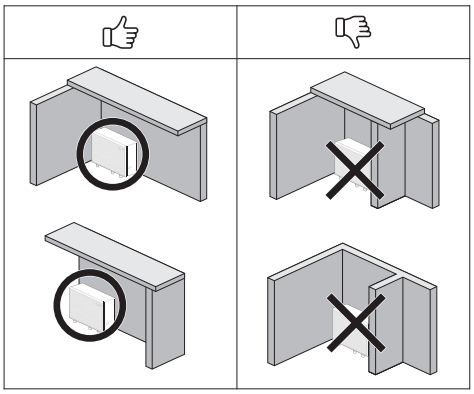

※Please do not block the slits in the exterior panels.

- Minimum operation space

Following distances around the outdoor unit must be respected under any condition for normal operation.
The distances are only for operation not to be seen as safety zone.

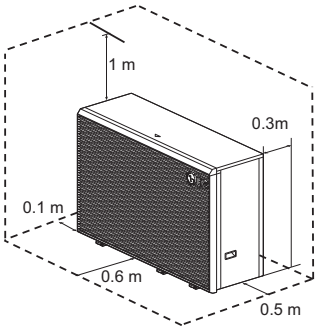

- Multiple installation

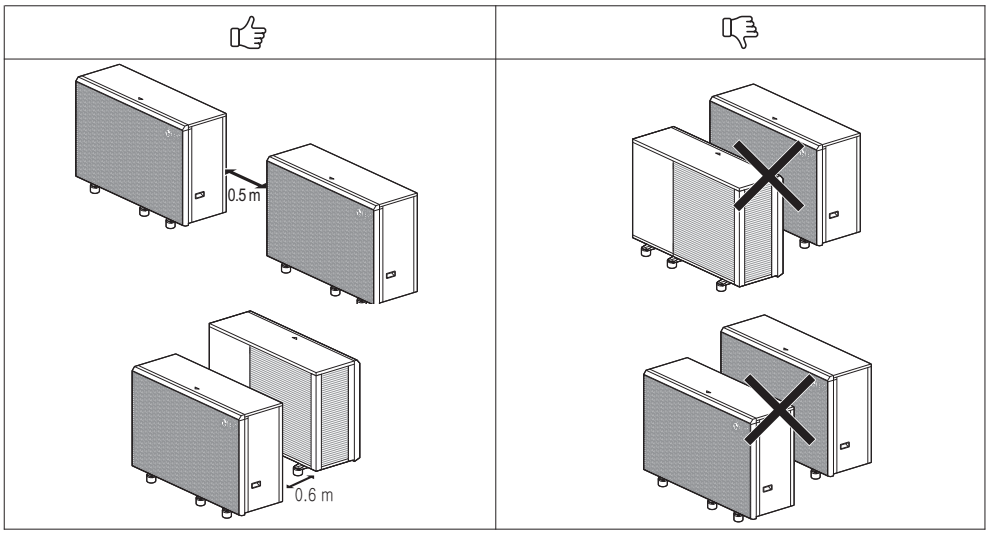

※ It can be different by model.

2. Selection of the best Location

2.2 Safety zone

Since the outdoor unit contains flammable refrigerant, a separate safety zone must be defined near the outdoor unit.

CAUTION

Be very careful for Safety Zone

- There must be no building openings. (windows, doors, roof windows, etc.)
- There must be no external and outlet air openings. (e.g. intakes of central ventilation system)
- There should be no building boundaries, adjacent buildings, passageways, or roads.
- Drainage system inlets, pump shafts, downspouts, and bath lakes should not be present.
- Other grooves, bottoms and shafts must not be present.
- There should be no Roof avalanches.
- Ignition sources must not be used.
- No parts should have a surface temperature higher than 360 °C.
- Open flames are strongly prohibited!

Above special safety precautions must be taken within the areas marked below.

1. Ground installation no obstacle

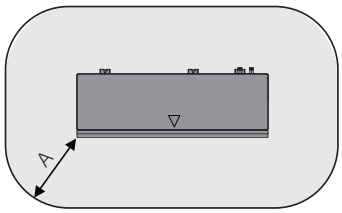

(Unit : mm)

A	1 000

2. Ground installation in front of the wall

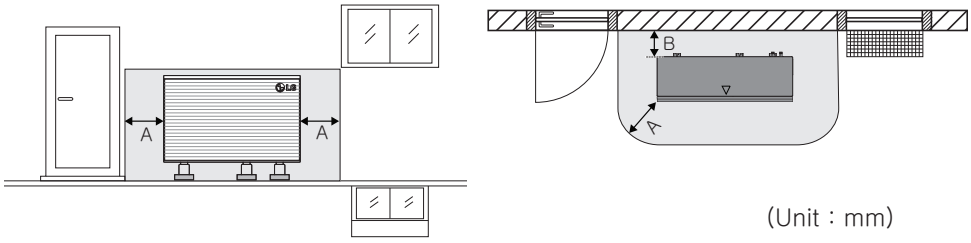

(Unit : mm)

A	1 000
B	300

2. Selection of the best Location

3. Ground installation in a corner with wall at the left side

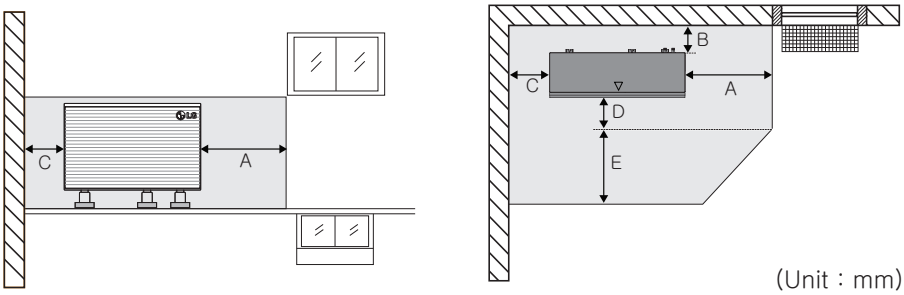

(Unit : mm)

A	1 000	D	600
B	300	E	1 800
C	500	–	–

4. Ground installation in a corner with wall at the right side

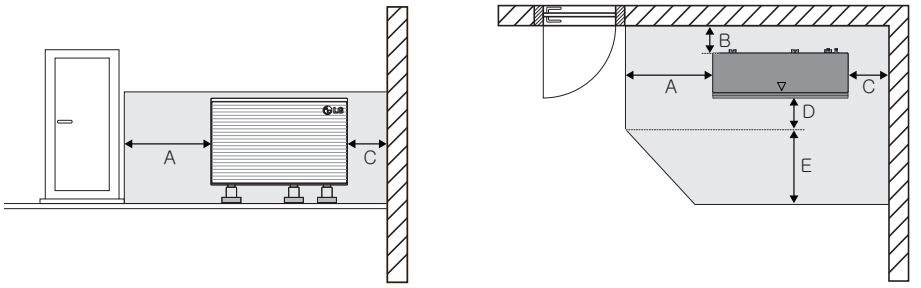

(Unit : mm)

A	1 000	D	600
B	300	E	1 800
C	500	–	–

2. Selection of the best Location

2.3 Lifting Method

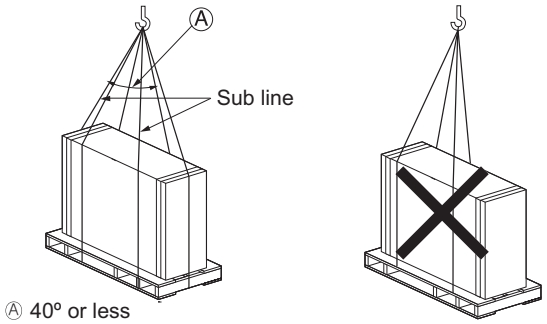

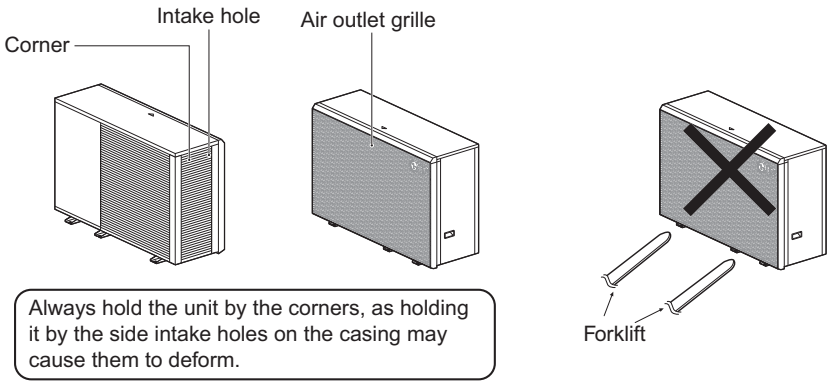

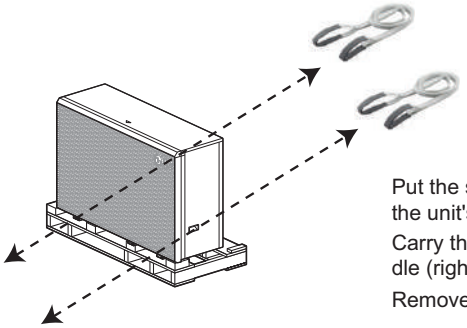

Put the sling belt (delivered as accessory) through the unit's foot.

Carry the unit using the sling belts and the unit's handle (right), and put it onto the installation structure.

Remove the sling belts and dispose them.

⚠ CAUTION

- Be very careful while carrying the product.
- PP bands are used to pack some products. Do not use them as a mean for transportation because they are dangerous.
- Do not touch heat exchanger fins with your bare hands. Otherwise you may get a cut in your hands.
- Tear plastic packaging bag and scrap it so that children cannot play with it.
  Otherwise plastic packaging bag may suffocate children to death.
- When carrying in Outdoor Unit, be sure to support it at four points.
  Carrying in and lifting with 3-point support may make Outdoor Unit unstable, resulting in a fall.
- Use 2 belts of at least 8m(26.2ft) long.
- Place extra cloth or boards in the locations where the casing comes in contact with the sling to prevent damage.
- Hoist the unit making sure it is being lifted at its center of gravity.

3. Foundation for Installation

- Check the strength and level of the installation ground so that the unit will not cause any operating vibration or noise after installation.
- Fix the unit securely by means of the foundation bolts. Prepare 6sets of M12 foundation bolts, nuts and washers available on the market.
- It is best to screw in the foundation bolts until their length are 20 mm from the foundation surface.
- When installing the unit on the ground, install a separate pedestal with enough height to install the drain nipple and higher than the average snowfall in your area.

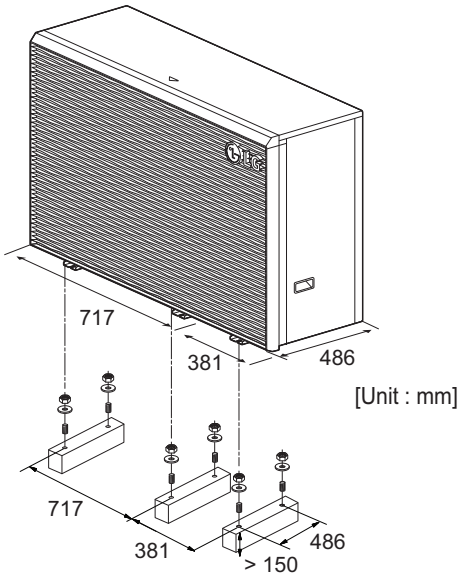

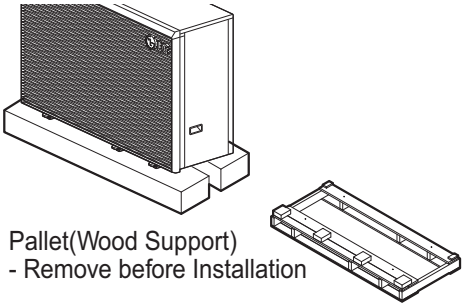

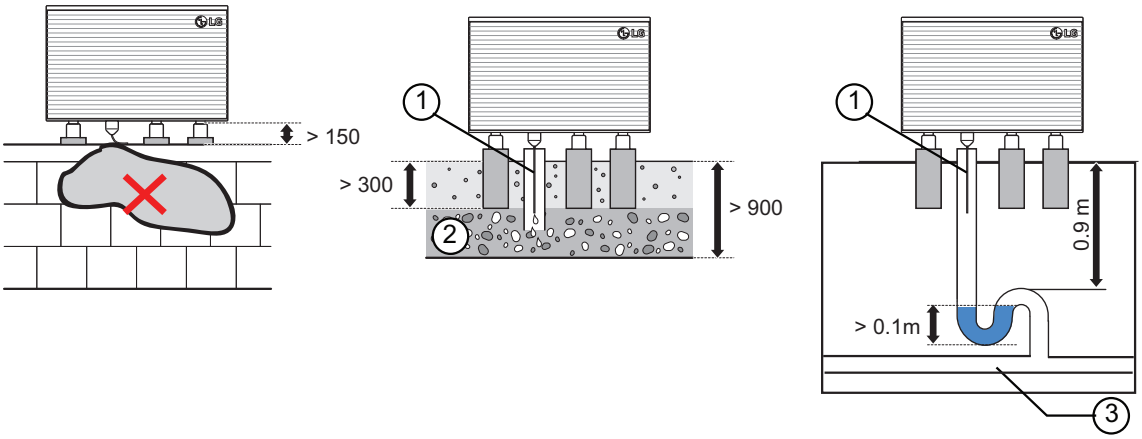

1. Section of condensate drain pipe exposed to open air must be insulated.
2. If condensate is drained into a gravel-bed, the pipe must be directed into frost-free area. The gravel must be able to absorb up to 100 ℓ of condensate per day.
3. If condensate water is drained into a rainwater sewer or other drainage pipe, note the slope of the pipe and make sure the pipe is frost-free.

⚠ CAUTION

- Do not connect to a sewer that is connected to the interior, as leaked refrigerant may enter the building.

⚠ WARNING

- Be sure that condensate does not discharge onto road to avoid accumulated freezing of condensate.

4. Water Control

4.1 Water quality

Water quality should be complied with EN 98/83 EC Directives.

CAUTION

- If the product is installed at existing hydraulic water loop, it is important to clean hydraulic pipes to remove sludge and scale.
- Installing sludge strainer in the water loop is very important to prevent performance degrade.
- Chemical treatment to prevent rust should be performed by installer.
- It is strongly recommended to install an additional filter on the heating water circuit. Especially to remove metallic particles from the heating piping, it is advised to use a magnetic or cyclone filter, which can remove small particles. Small particles may damage the unit and will NOT be removed by the standard filter of the heat pump system.
- Water quality check should be implemented before completing the installation of system.
  Detailed guide can be found in the table as below.

Water contents	Value			
pH	7.5~9.0			
Conductivity	10~500 uS/cm			
TDS (Total dissolved solids)	8~400 ppm			
Alkalinity (HCO_3^-)	60~300 (mg/L)			
Total hardness	4 ~ 8.5 ºdH			
	71.4 ~ 151.7 (mg/L)			
Iron (Fe)	≤ 0.2 (mg/L)			
Sulphate (SO_4^{2-})	≤ 100 (mg/L)			
Nitrite (NO_3^-)	≤ 100 (mg/L)			
Free chlorine (Cl_2)	≤ 1 (mg/L)			
Chlorides (Cl^-)	ppm		STS316	STS304
	pH7	15℃	3,000	180
		40℃	500	50
		60℃	200	30
		80℃	125	20
	pH9	15℃	18,000	700
		40℃	2,600	250
		60℃	1,000	170
		80℃	550	130

4. Water Control

4.2 Frost protection

In areas of the country where entering water temperatures drop below 0 °C, the water pipe must be protected by using an approved antifreeze solution. Consult your AWHP unit supplier for locally approved solutions in your area. Calculate the approximate volume of water in the system. And add six liters to this total volume to allow for the water contained in AWHP unit.

Antifreeze type	Antifreeze mixing ratio (by volume)					
	0°C	-5°C	-10°C	-15°C	-20°C	-25°C
Methanol	0%	6%	12%	16%	24%	30%
Ethylene glycol	0%	12%	20%	30%	-	-
Propylene glycol	0%	17%	25%	33%	-	-

If you use frost protection function, change DIP switch setting and input the temperature condition in Installation mode of remote controller. Refer to ‘CONFIGURATION > DIP Switch Setting > DIP Switch Information > Option Switch 3‘ and ‘INSTALLER SETTING > Antifreezing Temperature’.

CAUTION

- Use only one of the above antifreeze.
- If a antifreeze is used, pressure drop and capability degradation of the system can be occurred.
- If one of antifreezes is used, corrosion can be occurred. So please add corrosion inhibitor.
- Please check the concentration of the antifreeze periodically to keep same concentration.
- When the antifreeze is used (for installation or operation), take care to ensure that antifreeze must not be touched.
- Ensure to respect all laws and norms of your country about antifreeze usage.

4. Water Control

4.3 Capacity correction factor by antifreeze

Antifreeze Type	Item	Antifreeze % by wt				
		10%	20%	30%	40%	50%
Methanol	Cooling	0.998	0.997	0.995	0.993	0.992
	Heating	0.995	0.990	0.985	0.979	0.974
	Pressure Drop	1.023	1.057	1.091	1.122	1.160
Ethylene glycol	Cooling	0.996	0.991	0.987	0.983	0.979
	Heating	0.993	0.985	0.977	0.969	0.961
	Pressure Drop	1.024	1.068	1.124	1.188	1.263
Propylene glycol	Cooling	0.993	0.987	0.980	0.974	0.968
	Heating	0.966	0.973	0.960	0.948	0.935
	Pressure Drop	1.040	1.098	1.174	1.273	1.405

◆ Correction factor of cooling capacity

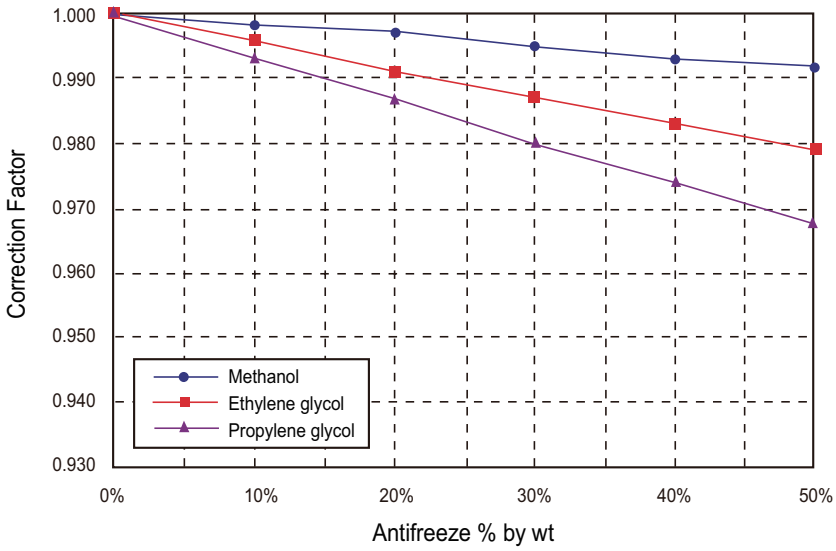

◆ Correction factor of heating capacity

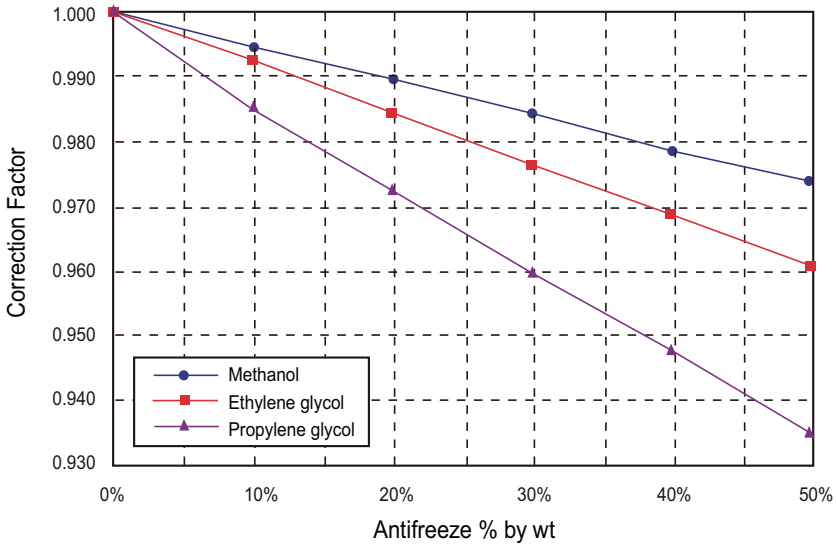

5. Water Piping System

■ Water piping and water circuit connection

Followings should be considered before beginning water circuit connection

- Service space should be secured.
- Water pipes and connections should be cleaned using water.
- Space for installing external water pump should be provided if internal water pump capacity is not enough for installation field.
- Never connect electric power while proceeding water charging.

■ Water piping and water circuit connection

1. Definition of terms are as follow :
   - Water piping : Installing pipes where water is flowing inside the pipe.
   - Water circuit connecting : Making connection between the unit and water pipes or between pipes and pipes.
2. While installing water pipes, followings should be considered :
   - While inserting or putting water pipes, close the end of the pipe with pipe cap to avoid dust entering.
   - When cutting or welding the pipe, always be careful that inner section of the pipe should not be defective. For example, no weldments or no burrs are found inside the pipe.
   - Drain piping should be provided in case of water discharge by the operation of the safety valve. This situation can be happened when the internal pressure is over 3.0 bar and water inside the unit will be discharged to drain hose.
3. While connecting water pipes, followings should be considered :
   - Pipe fittings (e.g. L-shape elbow, T-shape tee, diameter reducer, etc) should be tightened strongly to be free from water leakage.
   - Connected sections should be leakage-proof treatment by applying teflon tape, rubber bushing, sealant solution, etc.
   - Appropriate tools and tooling methods should be applied to prevent mechanical breakage of the connections.
   - Operation time of flow control valve(e.g. 3way valve or 2way valve) should be less than 90 seconds.
   - Drain hose should be connected with drain piping.

■ Water condensation on the floor

If underfloor cooling is performed, it is very important to keep leaving water temperature higher than 16 ℃. Otherwise, dew condensation can occur on the floor.If floor is in humid environment, do not set leaving water temperature below 18 °C.

■ Water condensation on the radiator

While cooling operation, cold water may not flow to the radiator. If cold water enters to the radiator, dew generation on the surface of the radiator can be occurred. Use 2way-valve to block circuits from cooling operation.

■ Water condensation on the floor

While cooling operation, condensed dew can drop down to the bottom of the unit. The condensing water must be sufficiently drained from the unit and dissipated frost-free.

Air Solution
LG Electronics Inc, 128, Yeoui-daero,
Yeongdeungpo-gu, Seoul, Korea
(07336)
http://partner.lge.com
http://sedc.lge.com

Copyright 2023-2025 LG Electronics Inc.
All Rights Reserved.

The air conditioners manufactured by LG have received ISO9001 certificate for quality assurance and ISO14001 certificate for environmental management system.
The specifications, designs, and information in this brochure are subject to change without notice.